ELITE
GREENHOUSES LTD
BOLTON ENGLAND 1953

INSTRUCTIONS & ILLUSTRATIONS FOR THE

TITAN K800 8'5" WIDE

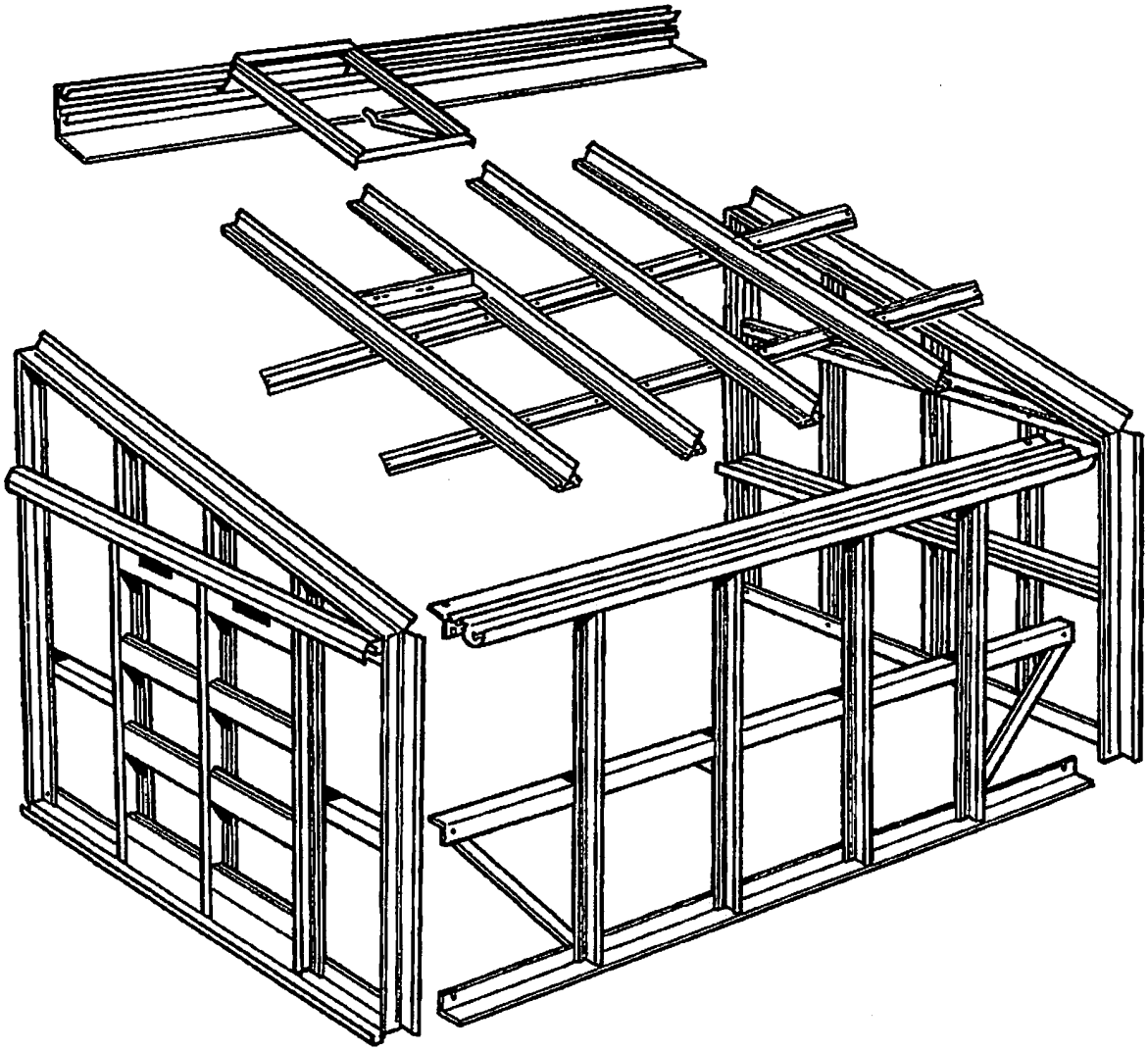

ELITE GREENHOUSES LTD
BENT SPUR ROAD, KEARSLEY, BOLTON BL4 8PD
TEL: 01204 791488 FAX: 01204 862412
enquiries@elite-greenhouses.co.uk
www.elite-greenhouses.co.uk

FITTINGS WITHIN THE KIT (NOT TO SCALE)

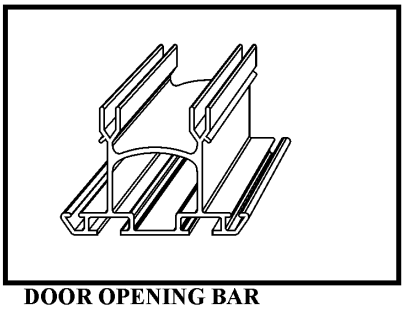

DOOR OPENING BAR

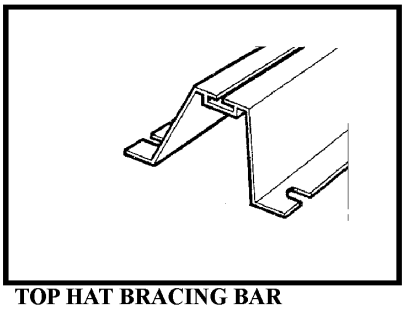

TOP HAT BRACING BAR

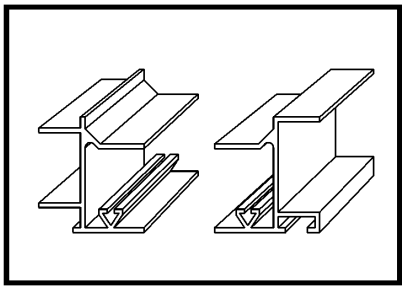

HANDED DOOR POSTS

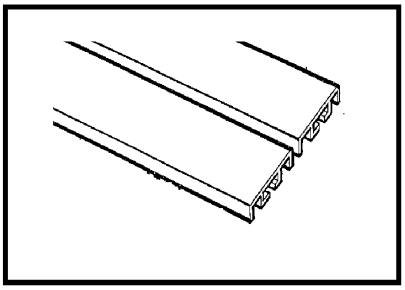

SHELF TOP SECTION

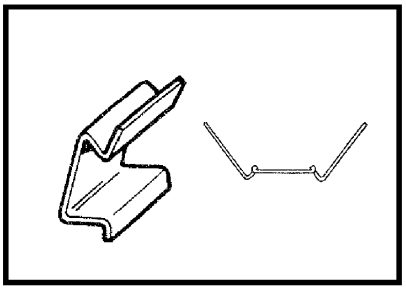

SPRING + WIRE CLIPS

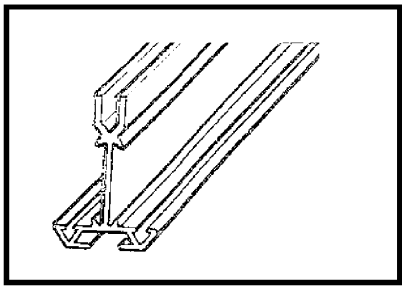

UNHANDED DOOR POST

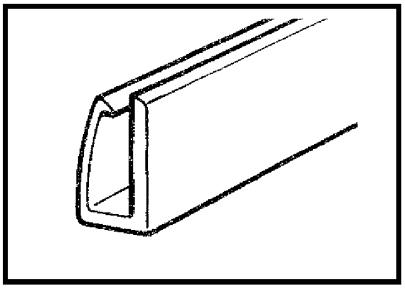

BLACK DOOR SKID

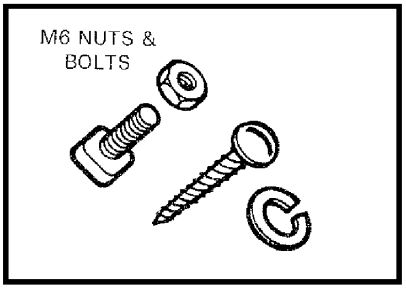

SELF TAPPING SCREWS
SPRING WASHER

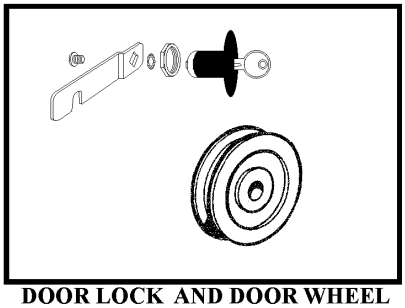

DOOR LOCK AND DOOR WHEEL

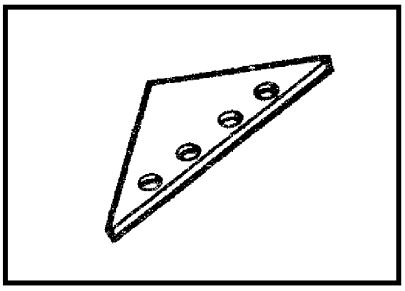

EAVE GUSSET PLATES

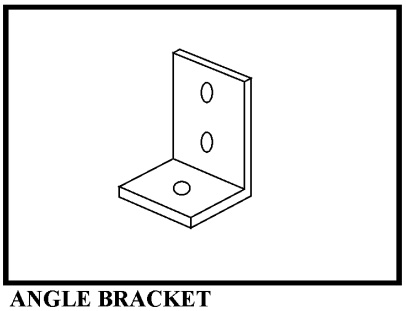

ANGLE BRACKET

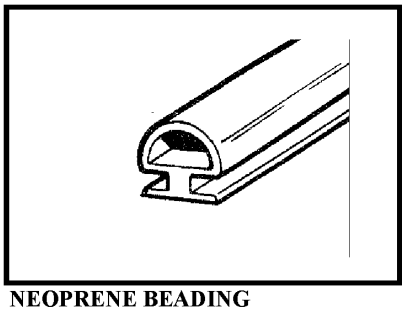

NEOPRENE BEADING

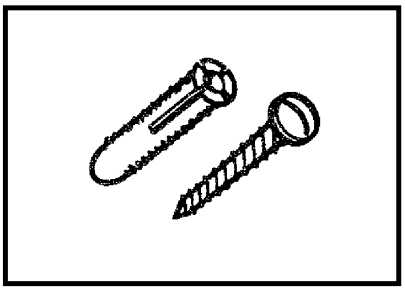

RAWL PLUGS & WOOD SCREW

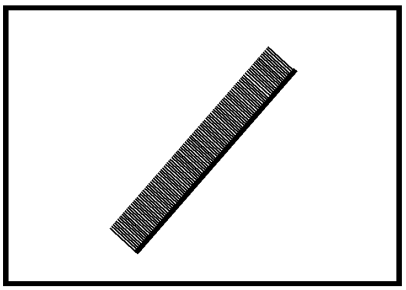

DRAUGHT EXCLUDER
+ CARRIER ATTACHED

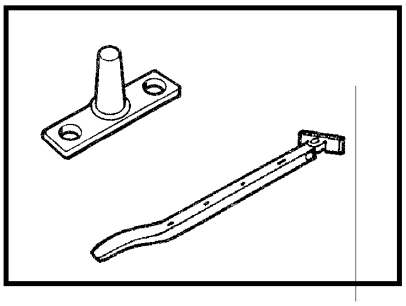

CASEMENT STAY + PINS

COMPONENT DRAWINGS (NOT TO SCALE)

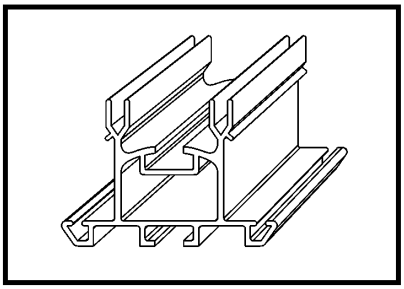

GLAZING BARS

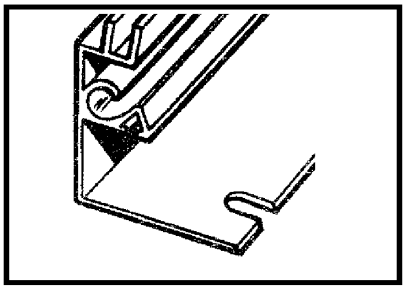

LEAN-TO RIDGE

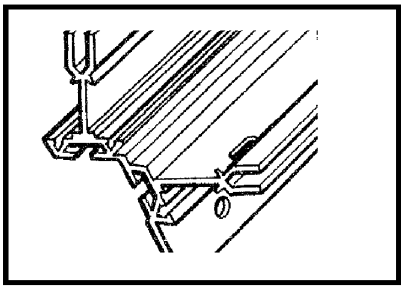

CORNER BAR

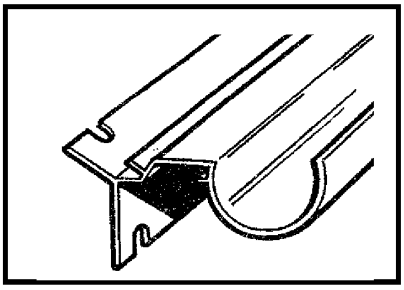

EAVES BAR/GUTTER

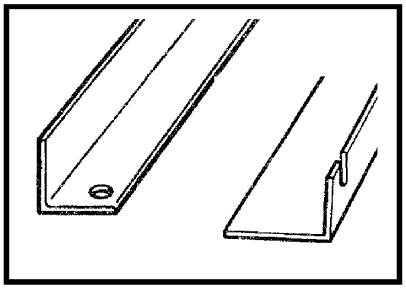

BRACING ANGLE & HORIZONTAL BRACE

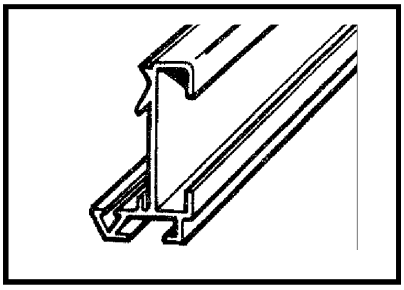

WALL BAR

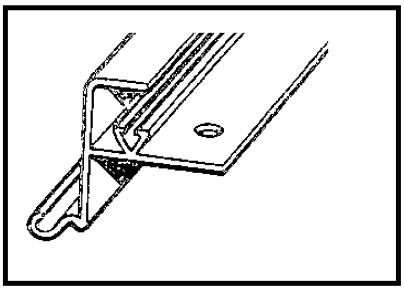

VENT TOP RAIL

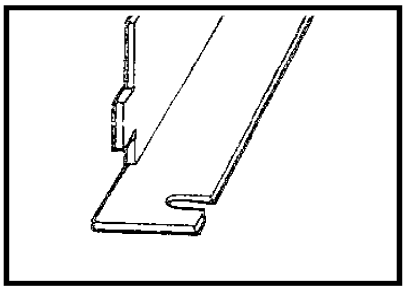

VENT SLAM BAR

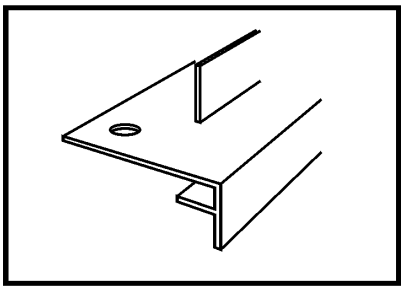

VENT BOTTOM RAIL

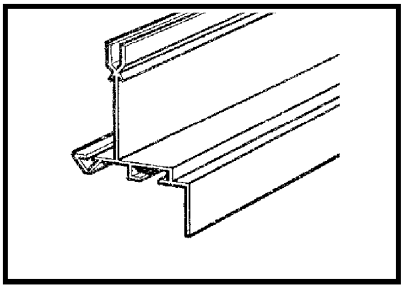

VENT SIDE RAIL

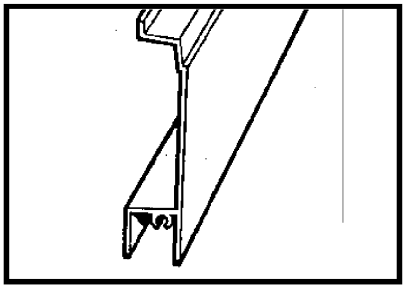

DOOR INFIL PANEL

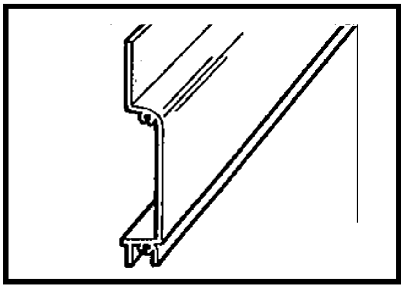

DOOR TOP/BOTTOM PANEL

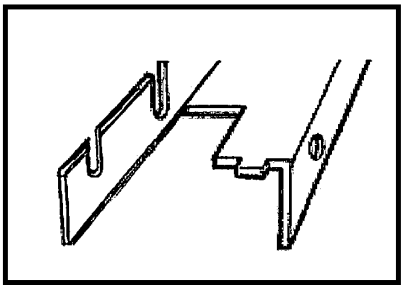

DOOR TRACK SUPPORT

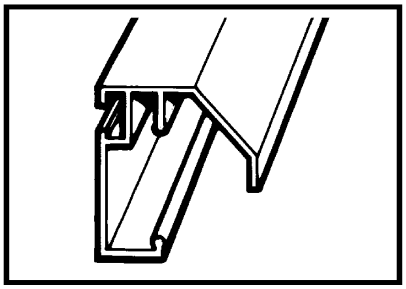

TOP DOOR TRACK

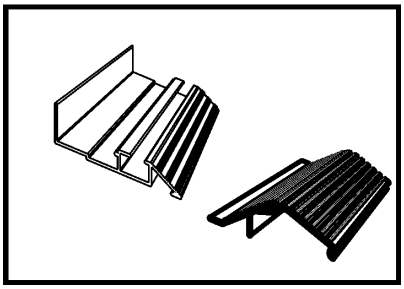

DOOR END CILL & RAMP

	PARTS LIST		6X8	8X8	10X8	12X8	14X8	16X8	18X8	20X8
1	50’ Glazing beading		1	0	1	0	1	0	1	0
2	100’ Glazing beading		2	3	3	4	4	5	5	6
3	Eave gusset plate		2	2	2	2	2	2	2	2
4	Brush draught excluder		2	2	2	2	2	2	2	2
5	Top door panel	Taped together and marked door	2	2	2	2	2	2	2	2
6	Bottom door panel		2	2	2	2	2	2	2	2
7	Door infill panels		6	6	6	6	6	6	6	6
8	Door track support		1	1	1	1	1	1	1	1
9	Ridge	Taped together	1	1	1	1	1	1	1	1
10	Gutter / Eave		1	1	1	1	1	1	1	1
11	Front cill		1	1	1	1	1	1	1	1
12	Heavy angle brace		1	1	1	1	1	1	1	1
13	Rear end glazing bar		3	3	3	3	3	3	3	3
14	Rear end cill	Taped together and marked end	1	1	1	1	1	1	1	1
15	Rear end horizontal bracing angle		1	1	1	1	1	1	1	1
16	Rear end wall bar		1	1	1	1	1	1	1	1
17	Door end cill + ramp		1	1	1	1	1	1	1	1
18	Door end glazing bar		3	3	3	3	3	3	3	3
19	Door end horizontal bracing angle		1	1	1	1	1	1	1	1
20	Door end wall bar		1	1	1	1	1	1	1	1
21	Door glazing bars—handed/unhanded		2/2	2/2	2/2	2/2	2/2	2/2	2/2	2/2
22	Front glazing bars—marked front		2	3	4	5	6	7	8	9
23	Front diagonal angles		2	2	2	2	2	2	2	2
24	Corner bars—taped in two packs 1 = left end, 1 = right end		4	4	4	4	4	4	4	4
25	Short bracing angles marked door end		4	4	4	4	4	4	4	4
26	8’ shelf		1	1	1	1	1	1	1	1
27	Vent (in packs)		1	1	1	1	2	2	3	3
28	Louvre (in packs)		1	1	1	1	1	1	1	1
29	Door track		1	1	1	1	1	1	1	1
30	Roof glazing bars		2	3	4	5	6	7	8	9
31	Top hats (length of greenhouse)		2	2	2	2	2	2	2	2

32 The following items can be found in the bag of fittings or additional packages.
Skeleton gun, tube of silicon, rolls of foam seal, anchor brackets, stainless steel screws, plastic plugs, M6 nuts and bolts, casement stays, stay pins, M4 pins, nuts and bolts, door lock, short and long self tapping screws, spring washers, door wheels and fittings.

The parts list will alter slightly depending upon the position of the double doors. Above is on the assumption the door is in the gable.

HELPFUL HINTS

• Please do take your time during construction and follow the safety code.

• Read all instructions carefully.

• Ensure that your base is level and square and built to the precise measurements indicated at the base section of this booklet.

• Base must be 90º to the wall it leans against.

• Do not alter the dimensions or shape of any component unless indicated to do so.

• This plan covers the entire range of 8' wide lean-to models and their options including door positions (front, gable end or double front), louvre location, shelf construction and vent construction.

• It is therefore possible that you may have remaining components on the completion of construction. The reason for this would be because one option has been chosen in preference to another.

• This detailed assembly instruction booklet will explain the construction procedures you require to correctly install your particular structure.

• **For the purpose of coloured models:**
• There may be some jig holes in some bars, these holes play no part in the assembly but assist in the painting process.
• Extra care must be taken in assembly of all coloured models so as not to scratch the paint and hence affect the appearance of the structure.

SAFETY

• When using electrical equipment outside always use a circuit breaker.
• Do not attempt to construct frame or glazing of lean-to in high winds.
• Glass is fragile, so safety gloves and eye protection should be worn when glazing any part of the structure.
• Please remember that if lean-to is to be situated over an entrance to a house or dwelling, 4mm safety glass must be used to eave level. Horticultural glass is unacceptable in this situation.
• Do not place structure in vulnerable situation. Children should not play near glass greenhouses.
Failure to observe these rules could result in personal injury or property damage.

Required Tools:
1. 10mm spanner
2. Heavy duty cross head screwdriver
3. Pair of pliers
4. Electric drill/circuit breaker
5. Masonry bit
6. Hacksaw
7. Sharp cutting tool (e.g. knife to cut beading)
8. Metal file

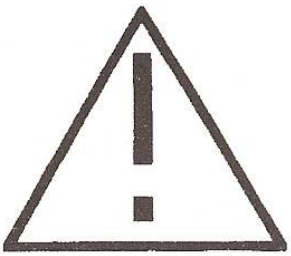

CONSTRUCTION OF FRAMEWORK AND WORK PROCEDURE

The structure should be completed from start to finish in the following order;
1. Floor/base preparation
2. Construction of frame assemblies
3. Joining of sub-assemblies to make full size frame
4. Securing structure to the base and wall
5. Glazing
6. Finishing off

Each of the above procedures are detailed at the appropriate stages of this booklet.

BASE SIZE AND PREPARATION (for concrete bases only) GABLE DOOR ONLY

K800	Length (Dimension B) Parallel to host wall	Width (Dimension A) Depth at 90° from wall	√ Square	External ridge height (Excluding base)
6 x 8 model	1.9910m	2.534m	3.222m	2.743m
8 x 8 model	2.609m	2.534m	3.636m	2.743m
10 x 8 model	3.225m	2.534m	4.101m	2.743m
12 x 8 model	3.843m	2.534m	4.603m	2.743m
14 x 8 model	4.461m	2.534m	5.130m	2.743m
16 x 8 model	5.079m	2.534m	5.676m	2.743m
18 x 8 model	5.697m	2.534m	6.235m	2.743m
20 x 8 model	6.315m	2.534m	6.804m	2.743m

N.B. If your doors are on the length of the greenhouse, i.e. under the gutter, then reduce B measurement by 35mm, and increase A measurement by 35mm.
For brick base/dwarf wall/drop door models, or any other door configuration, please contact Elite for a base plan.
If your greenhouse length is longer than or a modification of the above, contact Elite for a base plan. **If you have a corner location, i.e. one end missing – all base lengths reduced by 40mm. All bases of any material must be level and square and built to exact outside measurements.**

CONSTRUCTION OF THE FRAMEWORK ASSEMBLIES

The building is divided into a number of different frame assemblies.
1. Right hand gable end frame
2. Shelf installation
3. Left hand gable end frame
4. Front frame assembly
5. Roof assembly
6. Double door assembly
7. Roof vent assembly
8. General assembly of greenhouse unit
9. Construction and installation of louvre

N.B. If you have a partition, it is not assembled as an independent frame but is done at various stages during different parts of assembly.
The installation procedure should follow the above format and it is recommended that you complete each one fully before moving onto the next frame. For the purpose of this booklet, we have used an 8 x 8 lean–to as the basis for construction. If you have purchased another size, the principles of the job are identical.

All bases, of any material <u>must</u> be <u>level</u> and square and built of the exact outside measurements.

If you are putting a concrete footing down it is wise to dig a trench around the perimeter removing all top soil, insert some hard-core (broken brick etc.) into the trench and back fill with concrete. You can now begin to lay the required course of brick, remembering to insert a damp-proof strip one or two courses above ground level.

ELITE GREENHOUSES BASE DIMENSIONS

For Brick, Block, Concrete or Timber

The standard greenhouse is supplied with flat cills enabling it to be fixed to any level surface without the need for a brick base.
The dimensions given on the previous page must be used to locate the position of your lean-to onto a flat concrete floor.

When placing your order, you should have decided upon the door position. For the purposes of this plan, we have made the left hand gable the door end, but it can just as easily be the right hand end, so please read the instructions with the alternative in mind. **(Key point).**

ALLOY BASE ASSEMBLY

If you have ordered a separate alloy base then follow this instruction, if not disregard this step.

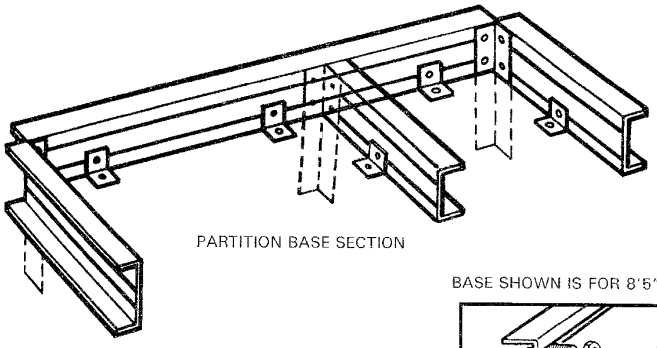

PARTITION BASE SECTION

BASE SHOWN IS FOR 8'5" MODEL

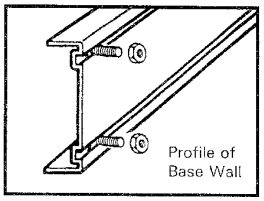

N.B. The holes in the top flange of the base are drilled when the greenhouse has been erected and put onto the base

Alloy base (when fitted to soil floor).

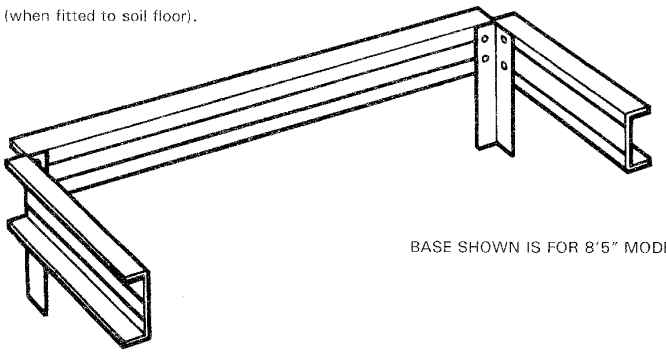

BASE SHOWN IS FOR 8'5" MODEL

Having assembled the base, proceed to the greenhouse construction.

N.B. The wider of the two small flanges goes towards the floor.

RIGHT HAND GABLE END FRAME

Please note that for the purpose of this plan, we have made the right hand gable end rear end (i.e. not the door end), but it could just as easily be the left hand gable end. So please read this section and the left hand gable end section with the alternative in mind.

From the main box you require:
1. Set of corner bars marked RIGHT END CORNER BARS

Set of glazing bars, angle and cill marked END

This contains A) Wall bar
B) Bottom cill
C) 3 Glazing bars
D) Horizontal bracing angle
E) Shelf

From the bag of assorted fittings and fitting within the box, you will require
One eave gusset plate
Nuts and bolts
Coil of glazing bead

N.B. See front of booklet for component diagram key.

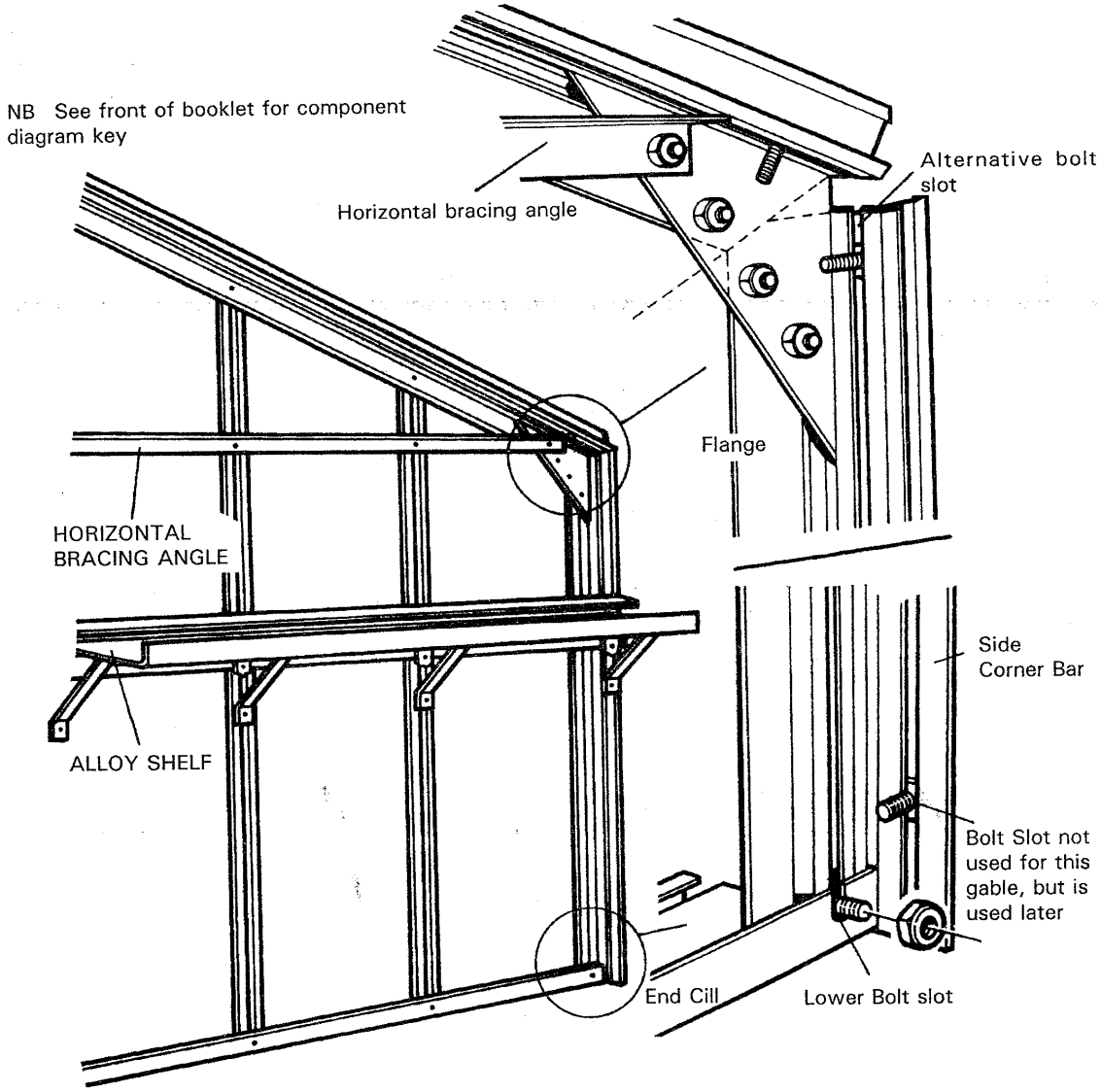

Procedure

If you have ordered a built in base model, please see separate amendment sheet before beginning construction.

1. Split the tape holding the corner bars together and also the tape holding the glazing bar, angle and cill. Slide glazing beading along the beading channel of the two <u>outer</u> grooves of the corner bars, (as seen in diagram below).

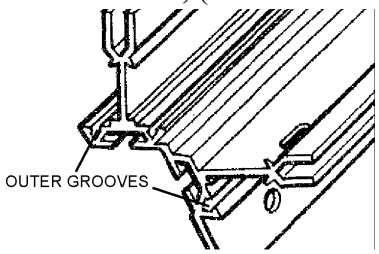

CORNER BAR

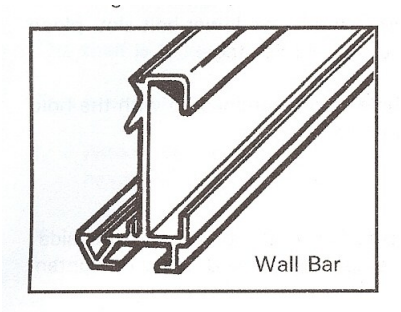

The use of long nosed pliers and warm soapy water is useful for the beading process.
When threading the glazing beading along the bars, there is a tendency for it to stretch and later contract. It is therefore advisable to have the beading protruding approx. 25mm at each end of each bar which can then be pushed back at either end if necessary.
Before assembly, you must ensure that the beading is flush with the ends of the bar. It may be necessary to trim the beading to size.

2. The longer of the other bars is the wall bar and has only one groove for glazing bead, while the glazing bar has two grooves for glazing bead. **Slide glazing bead in to these channels in the same way as for the corner bars.**

3. The corner bars now need to be distinguished between a roof corner bar and a side corner bar.

a. The roof corner bar is 2589mm long and has 5 holes in the flange, and is mitred at both ends.

b. The side corner bars is 1952mm long and has 1 hole in the flange, and is mitred at one end only.

Having determined which corner bar is the roof and side, you must now establish which way round they go for assembly purposes.

c. **Side corner bar** -The end that is mitred and with only one hole in the flange near to the mitre is the top of the bar. The bolt slots are to be on the inside for assembly purposes.

d. **Roof corner bar** -There is a mitre at both ends and 5 holes in the flange. The smallest of the two mitres is to be the top of the bar i.e. it is to be placed nearest to the ridge. The other end with the most severe mitre will go to the eave to marry up with the side corner bar.

4. Lay out the component parts on the ground with the bolt slots uppermost in the positions shown. Ensure that the wall bar is laid on the ground in a way so that the beaded section of the bar is on the inside for glazing purposes.

5. Now you must add the nuts and bolts to the bars. The diagram on page 10 illustrates the bolt configuration for the <u>rear end</u> gable. Where a dot appears, a bolt with a finger tip tightened nut should be slid along the bolt slot of the bar. In the case of the corner bars, the bolt should be slid along the facing bolt slot which faces up, and not the alternative bolt slot facing sideways.
Your greenhouse comes as standard with a 5 blade louvre. For the purpose of this plan we have assumed it will be fitted on the rear gable, so 4 nuts have been inserted as shown, if your louvre is positioned on another part of the greenhouse, then insert 4 bolts to the relevant position.

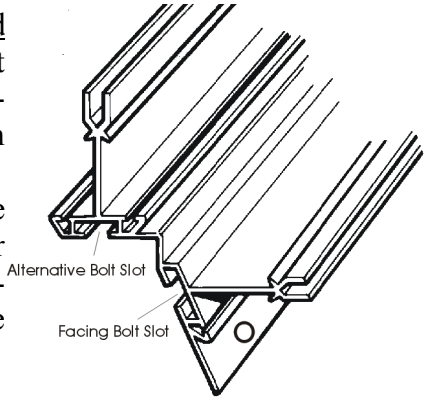

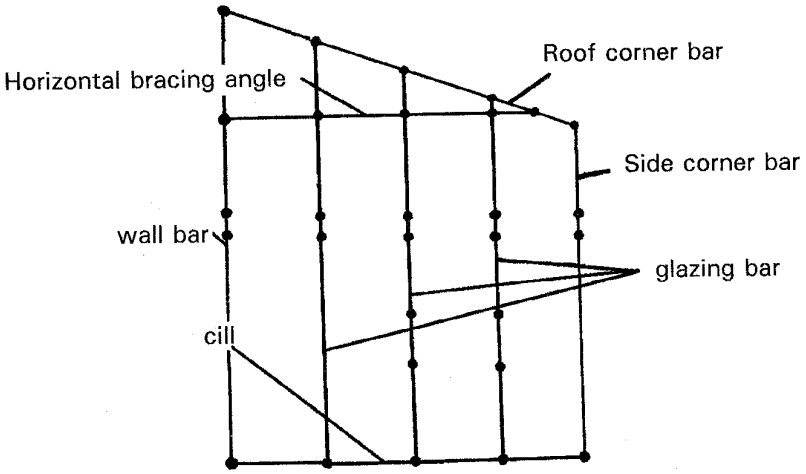

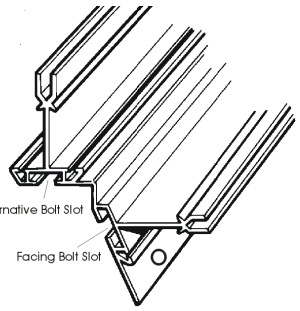

6. Roof corner bar—into the alternative bolt slot (facing sideways on each roof corner bar), slide 6 bolts – 1 top, 1 bottom and 4 middle, put a nut on and finger tip tighten, these will be used later in the general assembly.

7. Side corner bar— slide 3 bolts, 1 top, 1 bottom and 1 middle into alternative bolt channel. Starting with the **side** corner bar put the eave gusset plate over the top bolt in the facing bolt slot utilising the bottom hole in the plate. Slide the plate left or right until the next hole i.e. 2nd from the bottom in the gusset plate lines up with the hole in the flange of the side corner bar. Put nuts on and leave loose.

8. Next using the bolt previously inserted in to the bottom of the roof corner bar in the facing bolt slot, place the gusset plate over utilising the top hole in the plate. Do not put a nut on at this stage.

9. Slide the gusset plate left or right until the last hole not used (i.e. 2nd hole from top) lines up with the hole in the flange of the roof corner bar. Put a nut on the bolt and leave loose.

The diagram of the gusset plate on page 8 will assist in the construction.

10. Attach the bottom cill to the side corner bar using the previously inserted bolt in the facing bolt slot of the side corner bar. Slide the bolt downwards and into the slot on the cill. Put the nut back on and finger tip tighten (see diagram on previous pages for more detailed description of this assembly).

11. Next attach the wall bar and glazing bars to the cill (having first threaded the glazing bead in to the channels of all bars). Starting with the wall bar, using the bottom bolt previously inserted into the wall bar, offer the wall bar to the slotted hole in the bottom left side of the cill. Move the bolt downwards and into the slotted hole. Put the nut back on and finger tip tighten.

12. The glazing bar can now be attached to the cill in the same way as the wall bar.

13. Both the glazing bar and wall bar can now be fitted to the flange in the roof corner bars. Insert the bolt at the top of the wall bar and glazing bar in to the holes in the flange of the roof corner bar. Put a nut on both bolts and finger tip tighten.

14. Next the horizontal bracing angle can be fitted. The angle can be fitted either upwards or downwards. Place one end to the top bolt of the gusset plate (the one unoccupied by a nut –put a nut on and finger tip tighten. Now utilising the highest bolts previously inserted into the wall bar and glazing bars, slide these bolts up or down so that they are in line with the horizontal bracing angle and insert them through the holes in the horizontal bracing angle. Put nuts back on and finger tip tighten.

N.B. The extra hole in the middle of the horizontal bracing angle simply means that the bar is not handed, i.e. it can go at either end of the structure.

15. This gable end is almost complete. Before tightening all nuts, you must ensure the following.

a. The corner joint behind the eave gusset plate is tight, i.e. Corner bars are touching behind the gusset plate and that the roof corner bar is sitting on top of the side corner bar.

b. The glazing bars are pushed right up to the roof corner bar.

c. The glazing bars are pushed right down to the angle of the cill.

d. The horizontal bracing angle is on the top bolt of the eave gusset plate and that it is parallel to the cill.

16. Tighten all the nuts. Take care not to over tighten.

17. You can now fit the shelf. N.B. You have already inserted the bolts for the shelf so there is no need to add more.

18. The louvre is an independent frame and is better fitted to this gable when the house is assembled, prior to glazing.

Right hand end installation is now complete.

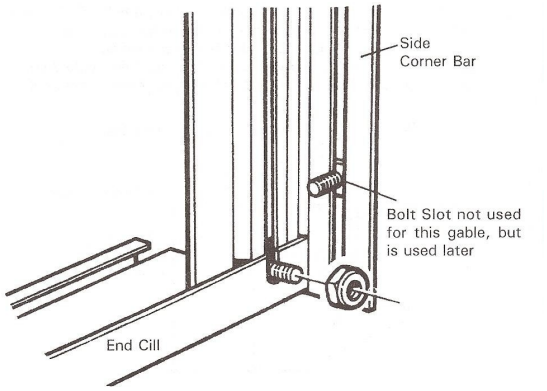

SHELF FITTING

The standard shelf is intended to fit on the rear gable end or side of the greenhouse. Not only is it very useable, but it adds lots of strength to the greenhouse.

The parts required for the shelf are:-

Top slat sections x 2
Cantilever braces x 5
Angle brackets x 4
Angle supports x 5
Nuts/bolts

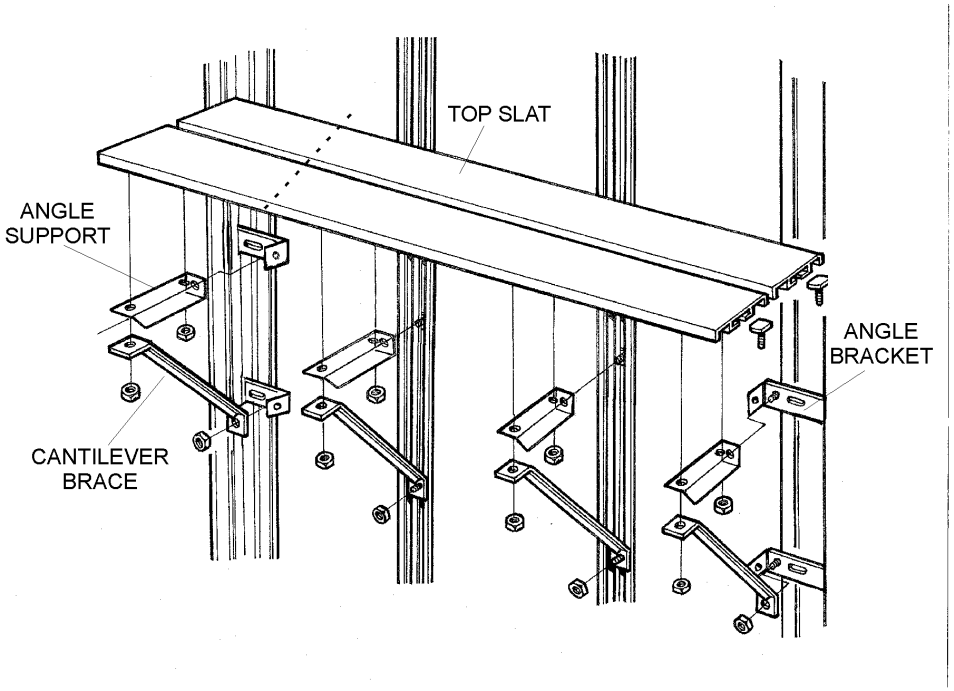

You must decide the height you want your shelf to be fitted. Fix one angle support to each vertical glazing bar at the desired height utilising the pre-inserted bolts. Do not fit the angle support to the corner bar yet. Fix an angle bracket to the corner bars at the same height as the angle support, and another angle bracket to the same corner bar approx. 200mm below the 1st. Note, the orientation of the angle bracket in the diagram.

Attach the angle supports to the angle brackets with the square edge against the greenhouse wall. (chamfered edge sticking out). The angle support must be fitted to the slot closest to the fold on the long side of the angle bracket.

Fix a cantilever bar to each vertical glazing bar approx. 200mm below the angle support, and also to the lower angle bracket on the corner bar.

Slide 1 bolt per angle support into the bolt channel on the underside of each top slat, and line up with the slots in each angle support. When attaching the slat to the mitred end of the angle support, you must also attach the unoccupied hole at the end of the cantilever brace to the same position.

NB. The tee bar cantilever is a universal part used in the greenhouse for other purposes and shelves. If the angle appears slightly ‘out’ it can easily be moved into position by altering the angle with a pair of pliers, if necessary.

LEFT HAND GABLE END FRAME

If you have a double gable door, the opening MUST be in the centre bays of the gable.

Please note that for the purpose of this plan, we have made the left hand gable the door end, but it could just as easily be the right hand gable end. So please read this section and the preceding one with the alternative in mind.
From the main box you will require:

1. Set of corner bars marked LEFT HAND END CORNER BARS

2. Set of glazing bars, angle and cill marked END
This contains A) Wall bar
B) Door cill
C) 3 Glazing bars (1 small to fit above the door)
D) 1 Horizontal bracing angle

3. Set of angles marked DOOR END

From the bag of assorted fittings and fittings within the box, you will require:
One eave gusset plate

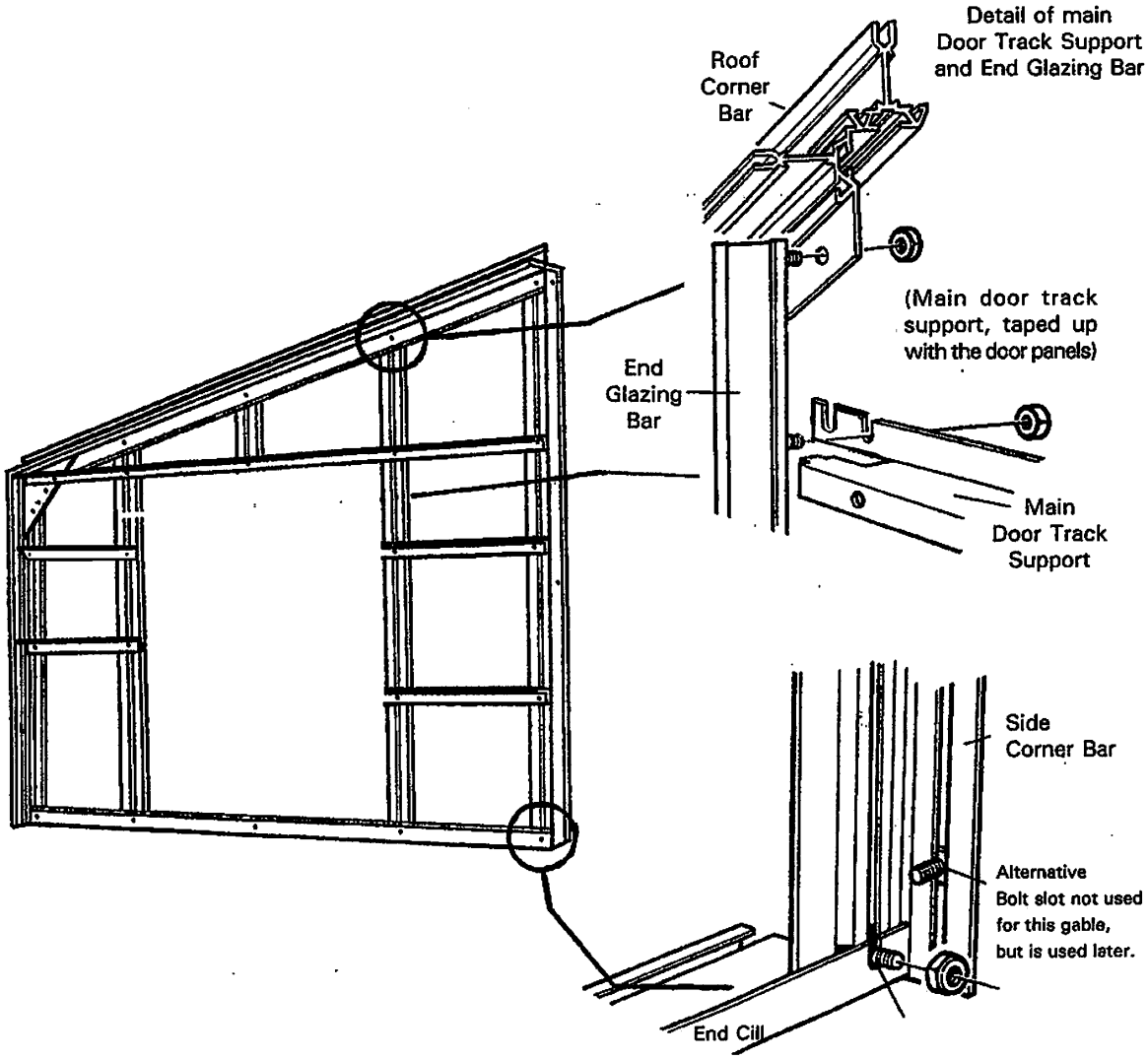

Procedure

1. The initial construction of this gable is identical to the right hand gable except for the changes listed below. Door end does not consist of louvre or shelf. The diagram below shows the bolt configuration for the door end. (Again a dot indicates a bolt).

N.B. If your door is on the front, (parallel to the wall) then repeat the bolt configuration for R H end (except for shelf and louvre bolts).

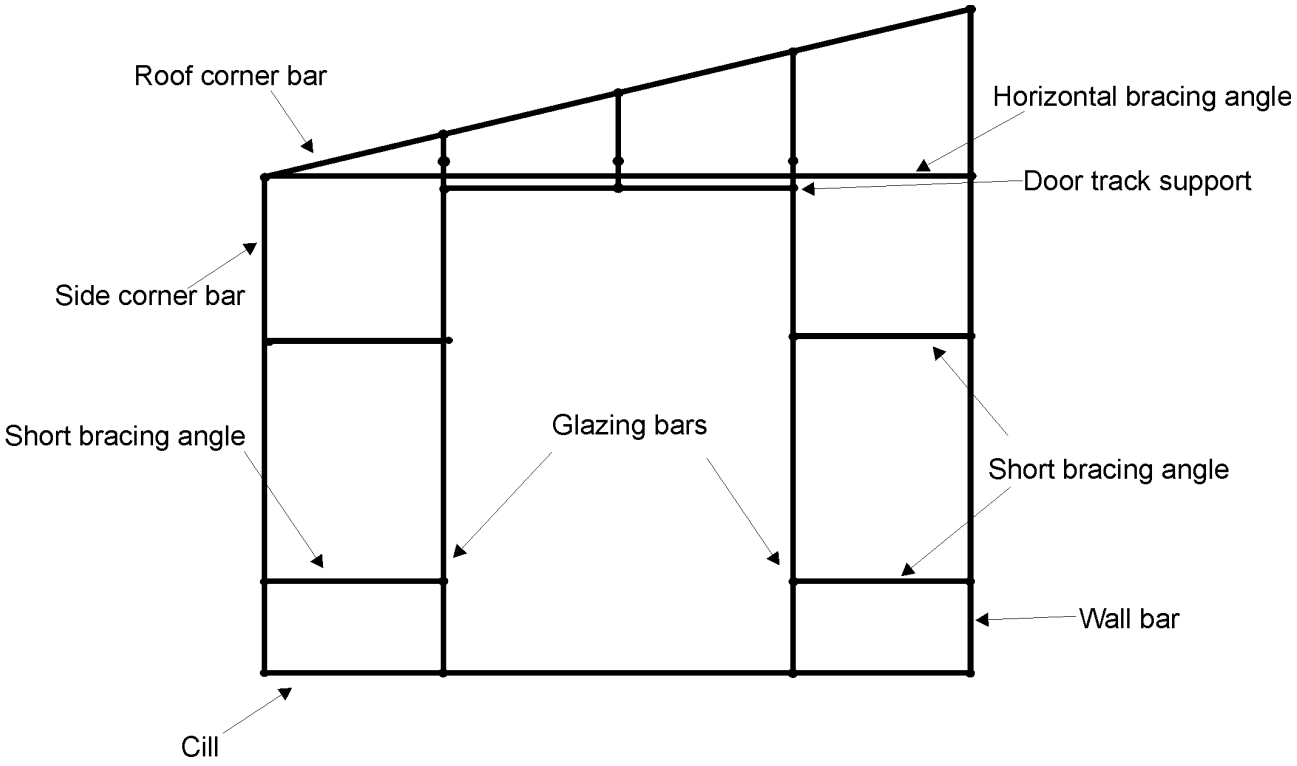

On the door end there are a combination of short bracing angles to be fitted which can be found in the main box marked DOOR END.

2. These four bars like the horizontal bracing angle, can be fixed either upwards or downwards (for aesthetic reasons we suggest that you attach them the same way as horizontal bracing angle). Using the previously inserted bolts, attach the short bracing angle to the unit as shown (exact distances are not required). Put nuts back on and finger tip tighten all three bars.

3. The door track support looks similar to a 'Z' bar (see component drawings at beginning of booklet). The door track support is fitted on 2nd and 4th glazing bars from the wall, using the two remaining unoccupied nuts and bolts. The end slotted holes must face upward like a letter 'U' (see diagram). **Key Point.**

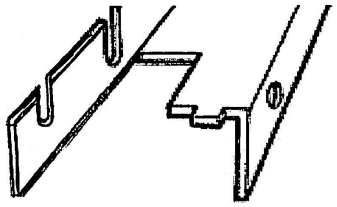

DOOR TRACK SUPPORT

4. Tighten all nuts remembering not to over tighten. The door track support may need altering slightly in the construction, so finger tip tight will be sufficient at this stage.

N.B. Do not fit the door track at this stage – this will be done later in General Assembly.

FRONT FRAME ASSEMBLY

From the main box and subsidiary extension packages you will require:

1 Eave/gutter bar
1 Cill – Taped together in one bundle marked FRONT (the ridge is also in this pack)
1 Heavy angle brace
1 Pack of glazing bars marked FRONT
i) if unit is 6' long = 2 bars
ii) 8' long = 3 bars
iii) 10' long = 4 bars
iv) 12' long = 5 bars
2 – bracing angles

N.B. If you have ordered a partition, you need to decide where it will be situated. At that point you substitute a partition corner bar for a glazing bar. The heavy angle brace needs to be cut to go either side of the partition corner bar. If your building is over 20' you will have an extension package which has an inclusive partition – not the same as the above detail.

The partition corner bars have vertical saw cuts at each end to allow them to fit on and into the gutter, ridge and cill pieces.

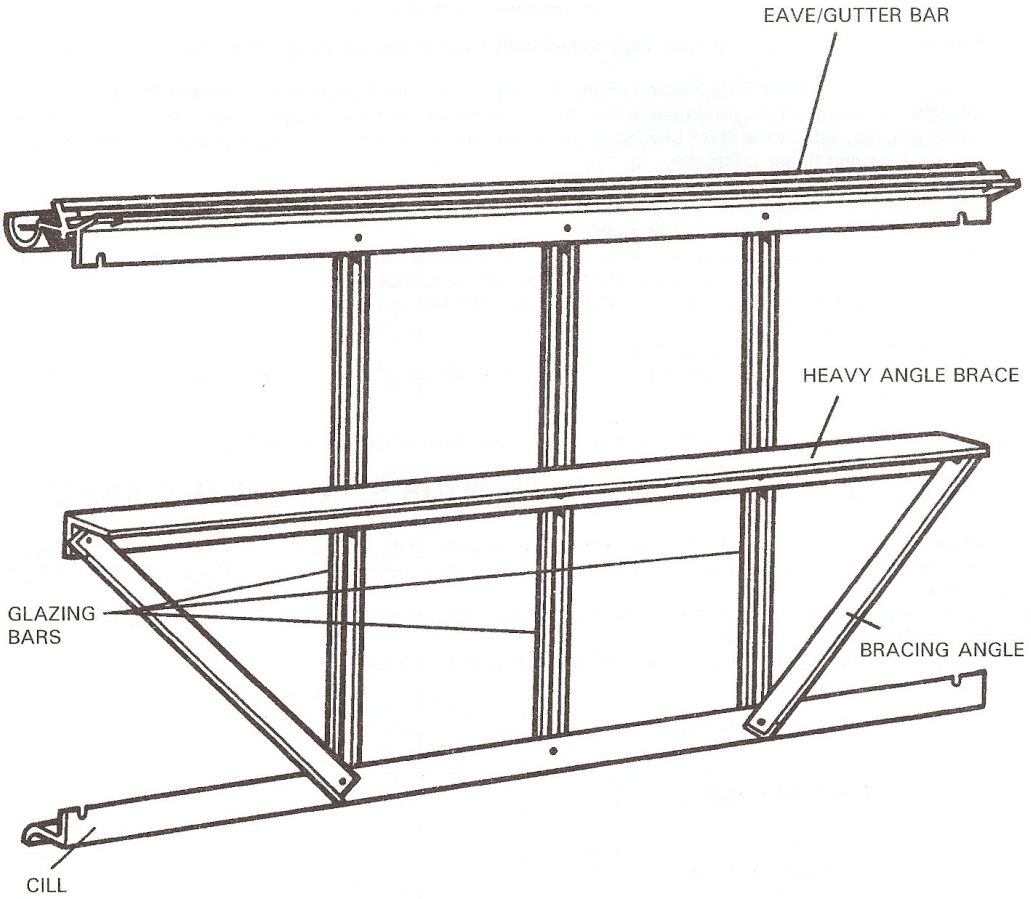

Regarding the partition, you need do nothing more at this stage. When the greenhouse is fully constructed and anchored to the wall and base, you build the partition in situ and not as an independent frame. **(Key point).**

Procedure:

1. **Insert the glazing bead in to the gutter/eave bar and glazing bars** as shown below (in the manner previously outlined).

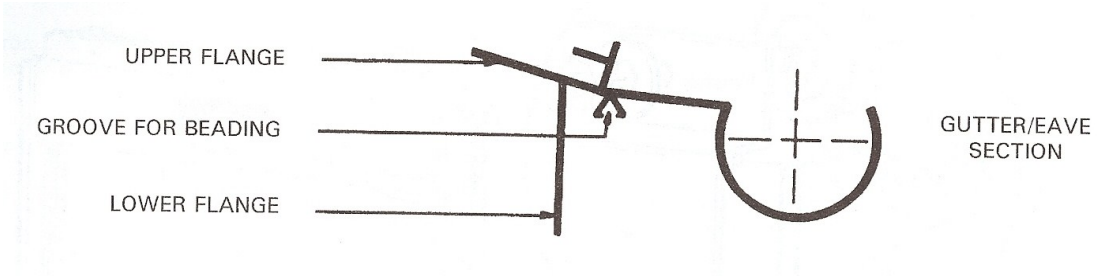

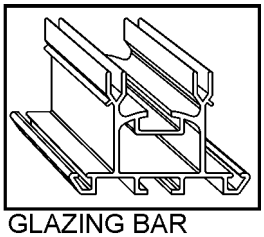
GLAZING BAR

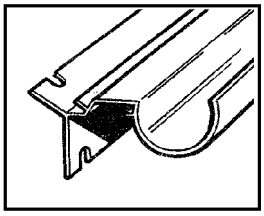
EAVES BAR/GUTTER

2. Lay out the component parts on the floor with the bolt slots uppermost. The gutter and cill are facing the ground.

3. Insert 3 bolts into each glazing bar (1 – top, 1 – middle, 1 – bottom). If you are fitting a front door, insert an extra bolt into the top of each glazing bar that form the door opening. These will be used later in the installation of the door.

4. For double doors, do not fit a glazing bar in the centre of the door way. i.e. vertical bar No 2 on the picture is not supplied or fitted.

5. Attach the gutter/eave bar to the top of each glazing bar utilising the top bolt in each glazing bar as illustrated.

6. The bottom cill will bolt to the bottom of the glazing bars in a similar manner. Before securing the nut on to the bottom bolt of the outer glazing bars, place the diagonal brace angles over the bolt. The bracing angles must be arranged so that the inside of the angles are facing each other.

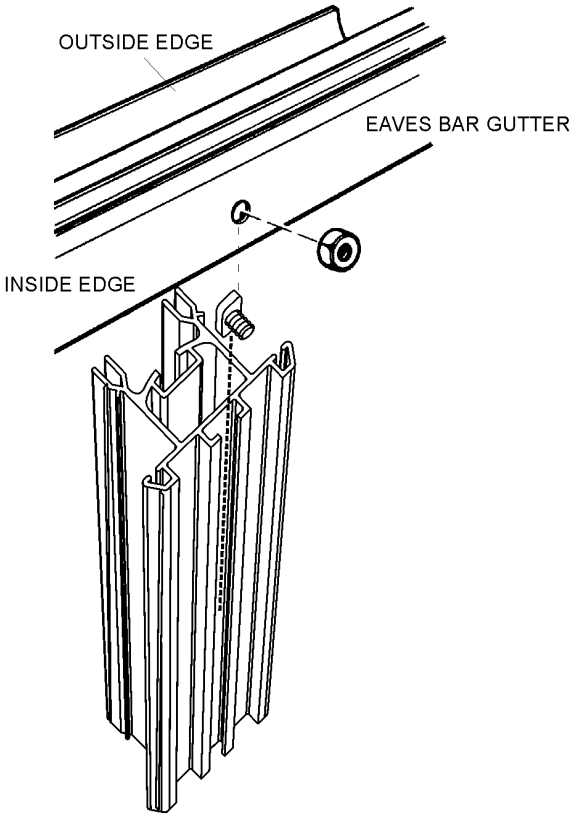

7. Attach the horizontal angle brace utilising the previously inserted bolts and position the bar around the middle of each glazing bar. Ensure that the horizontal angle brace is parallel to the gutter/eave bar and cill.

8. Ensure all points are tight and frame is square before tightening nuts.

9. Front frame assembly is now complete.

GENERAL ASSEMBLY OF GREENHOUSE UNIT

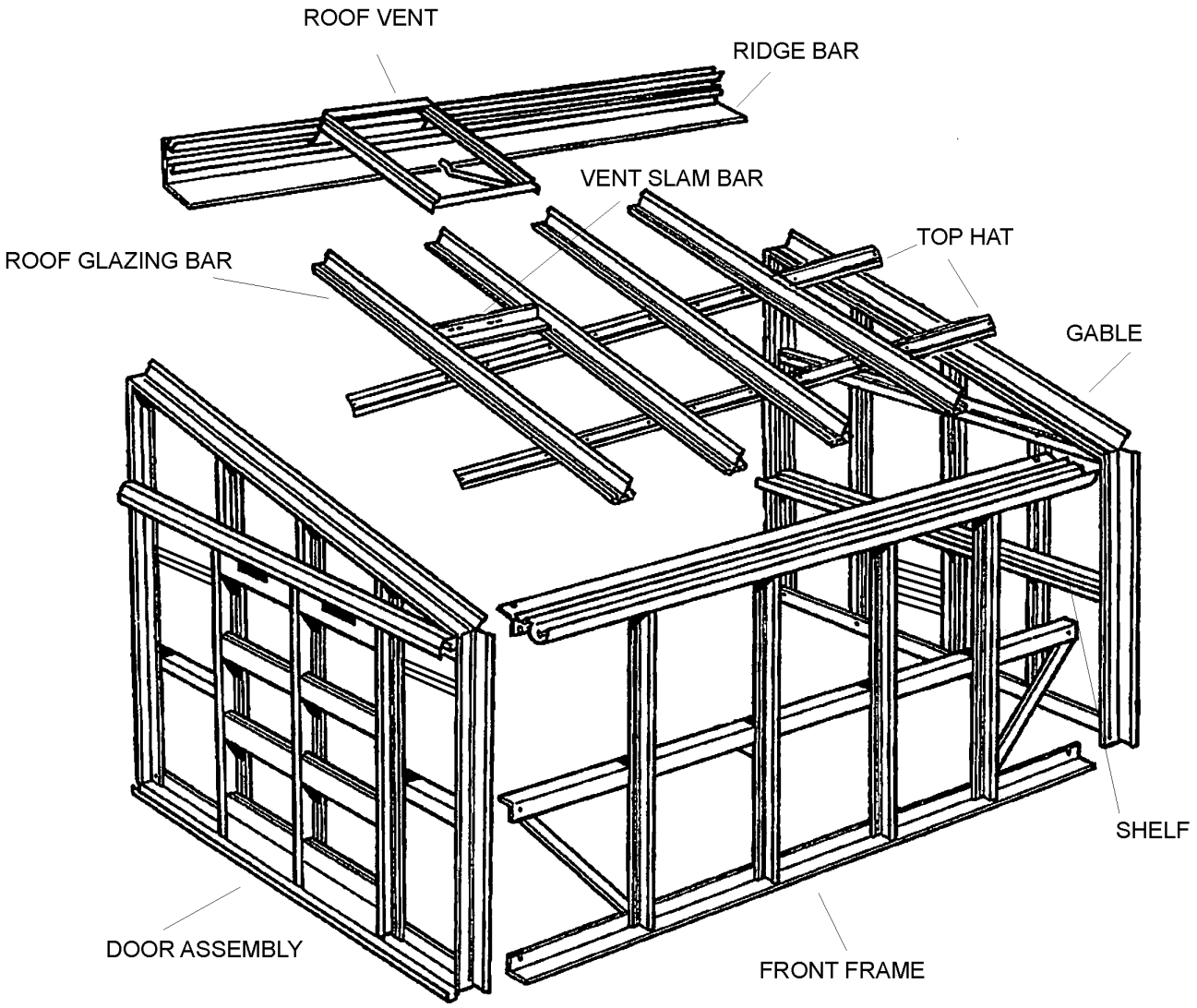

A Attach right and left hand gables to front frame.

1. Stand the right hand end frame and the front up so that they meet at the right front corner. Push the gutter/eave bar into the small gap between the roof and side corner bars so that the slotted holes at the end of the eave flanges line up with the bolt slot in the corner bar. The gutter is OUTSIDE the end frame and the two flanges that form the angle of the roof and side are INSIDE and tight up against the bolt slots of the roof and side corner bars. **(Key point).**
The extra bolts inserted into the corner bar alternative bolt slot during gable end assembly can now be slid into the slots in the eave bar to secure the corner.

2. The bottom cill attaches to the inside of the corner bar. The bolt placed in the bolt slot at gable end assembly will slide down into the slotted hole at the end of the cill.

3. Do the same operation with the left hand gable and front frame.

4.Next, attach the horizontal front angle and two diagonal bracing angles to the extra; third bolt inserted in the side corner bars.

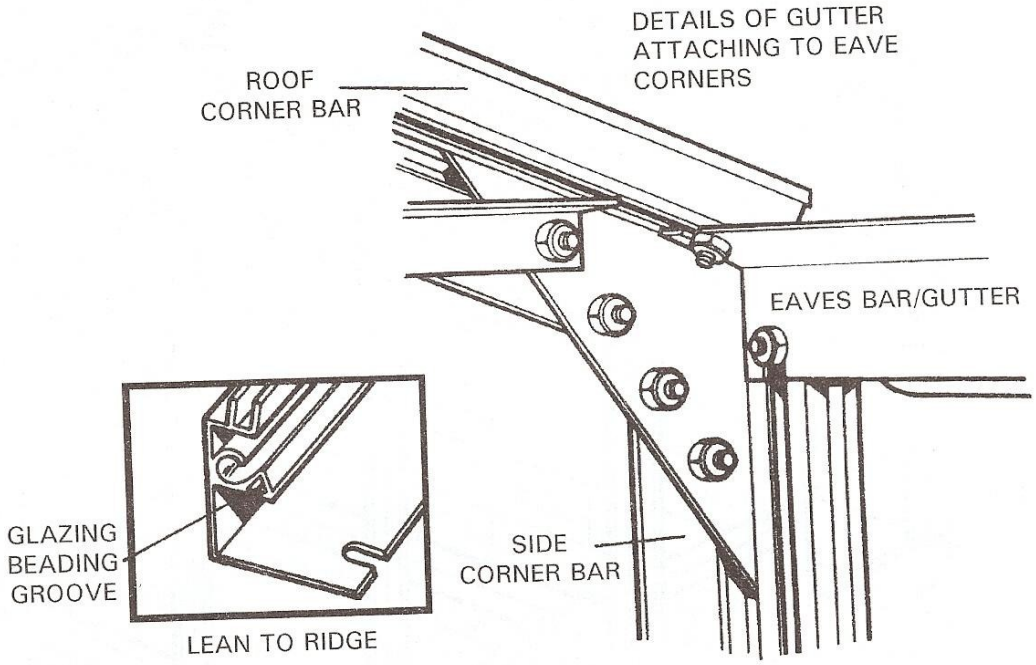

B The next step is to put the roof on and this is done in 3 stages.

1 Attaching the ridge

Firstly insert the glazing beading into the 'v' groove, then in the same way the gutter slotted into the corner bars so too does the ridge. Slot the ridge on to the corner bar, ensuring that the flat side of the ridge is facing the wall. The bolts inserted in the roof corner bars at original frame assembly can now be slid into the slots at the end of the ridge. **(Key point).**
See pictures on next page.

2 Securing the roof bars

Firstly thread the glazing bead into both grooves of each roof glazing bar, as previously described in an earlier section.
Starting at one end (your choice).

1. Slide 4 bolts along the bolt slot of each roof glazing bar. Add an extra bolt to the roof bars onto which the roof vents will be fitted. Please note the roof vent must be fitted between 2 roof glazing bars. It cannot be fitted to an end or partition corner bar. Add the nut and finger tip tighten.

2. From the top of the glazing bar (and all other glazing bars when you arrive at that stage), slide 1 bolt down the bolt slot, and attach to the prefabricated hole in the ridge bar.

3. Then repeat at the bottom of each roof glazing bar and attach to the gutter bar.

4. Attach all the other glazing bars to the gutter and ridge in the exact same way as above.

5. Tighten all the nuts taking care not to over tighten.

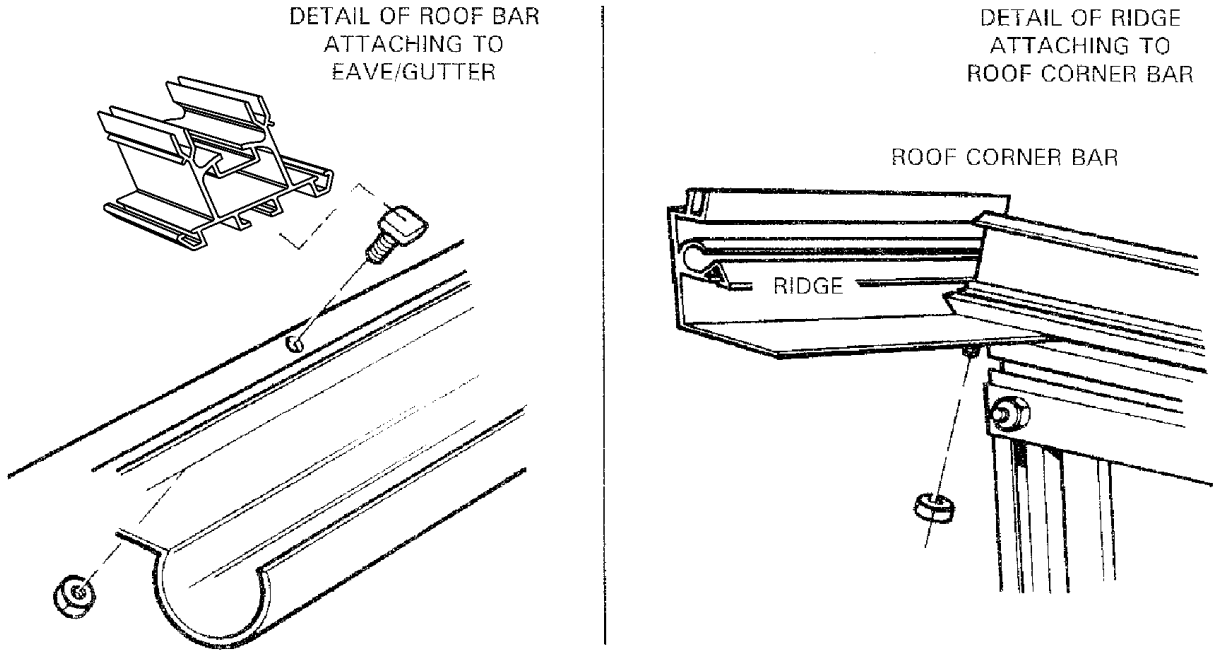

3 Sliding the vent into position

The hinge is a groove ball and socket joint, the socket is an integral part of the ridge, the ball being a part of the vent top rail **(Key point).** You must identify correctly these two sections.
Then slide the vent on to the ridge from one end. With the vent in the open position, push the vent along the ridge until it covers the middle section (if your greenhouse is more than 3 panes long you must decide which section the vent is to be situated in). The two side rails of the vent will overlap the outside edges of the middle two roof bars.

The vent slam can now be fitted to the two roof bars just underneath the bottom rail of the vent. The ends of the slam bar are cut out to go round the profile of the roof glazing bar. Secure the slam bar with the top bolt in each bar that the vent is fitted, that were inserted when you fitted the bottom of the roof bars to the eave.

The slam bar is an unequal angle and it attaches to the roof with the longer part of the angle pointing skywards, i.e. toward the bottom rail of the vent, and the shorter part of the angle pointing to the gutter, i.e. the outside corner of the angle is facing inside the structure. **(Key point)**.

To prevent the vent moving left/right during operation, insert a bead of silicone into the hinge part of the ridge at the end of the vent top rail. This can be done later when sealing the frame to the wall (see page 22).

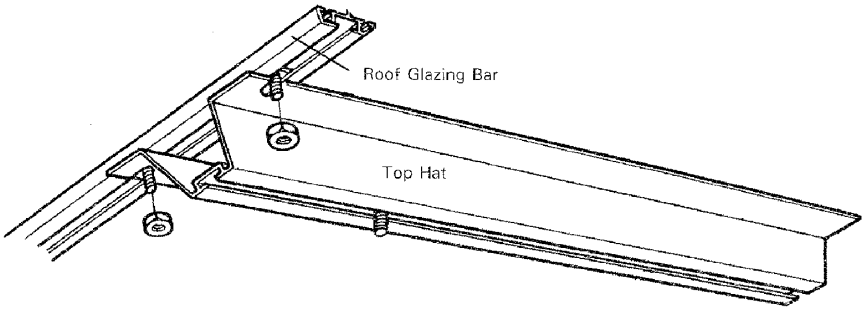

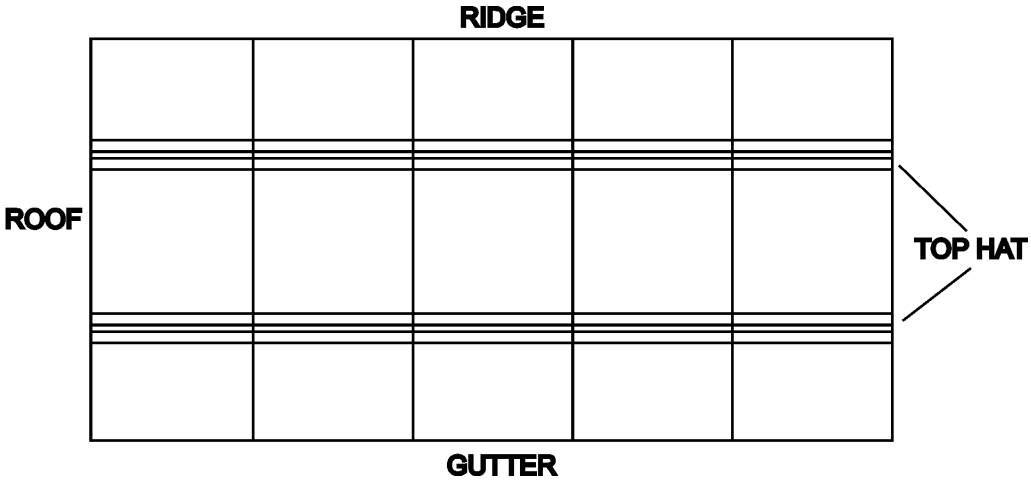

1. On all models there are 2 top hat roof sections that are fitted along the length of the greenhouse.

2. Each top hat has 2 holes every 2' to match the hole spacing of the gutter and ridge.

3. An extra pair of hands would be useful at this stage.

4. Line up the holes with the previously inserted bolts in each roof corner and glazing bar and position 1 top hat directly under the vent slam bar and the 2nd top hat approximately 700mm up from the eave.

5. If you have a partition, then the top hats will be pre-cut to enable fixing around the partition corner bars. One top hat will have a flat cut at each end, and the 2nd (the extension) will be notched at 1 end only. The notched end will fix to the 'outside' of the partition corner bar. (Outside of the corner bar is the side of the partition that the door slides).

The frame assemblies and final unit shape are now complete, but there are three further steps to take:

1. **Securing to the wall and base**
2. **Fitting the door track and the door**
3. **Glazing the completed structure**

Securing to the wall and base

1. Offer the structure to the wall that it is to abut, ensuring that the vertical wall bars are plumb, and that the building is square and at 90º to the wall. **(Key point).** The ridge may dip slightly in its own weight so you must ensure that its horizontal, perhaps by the use of a prop or similar. Mark the wall through the holes in the wall bar and ridge. Then remove the structure to another location and drill through into the wall at the pre-marked locations with a masonry drill.
Insert the plastic plugs into the holes.

2. The coil of paper-backed resin impregnated foam can now be stuck on to the wall side of the ridge and wall bars. **(Key point).**

Offer the structure to the wall again and screw through the holes into the pre-located plastic plugs in the wall with the screws provided.

3. Having successfully anchored the structure to the wall you can now secure it to its base.
You must ensure that the structure is square and level and that your wall is plumb and the base (alloy or brick) is set at 90º to the wall it abuts. **(Key point).**

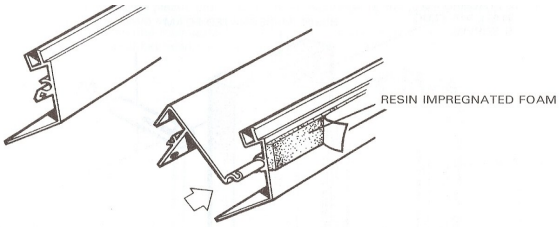

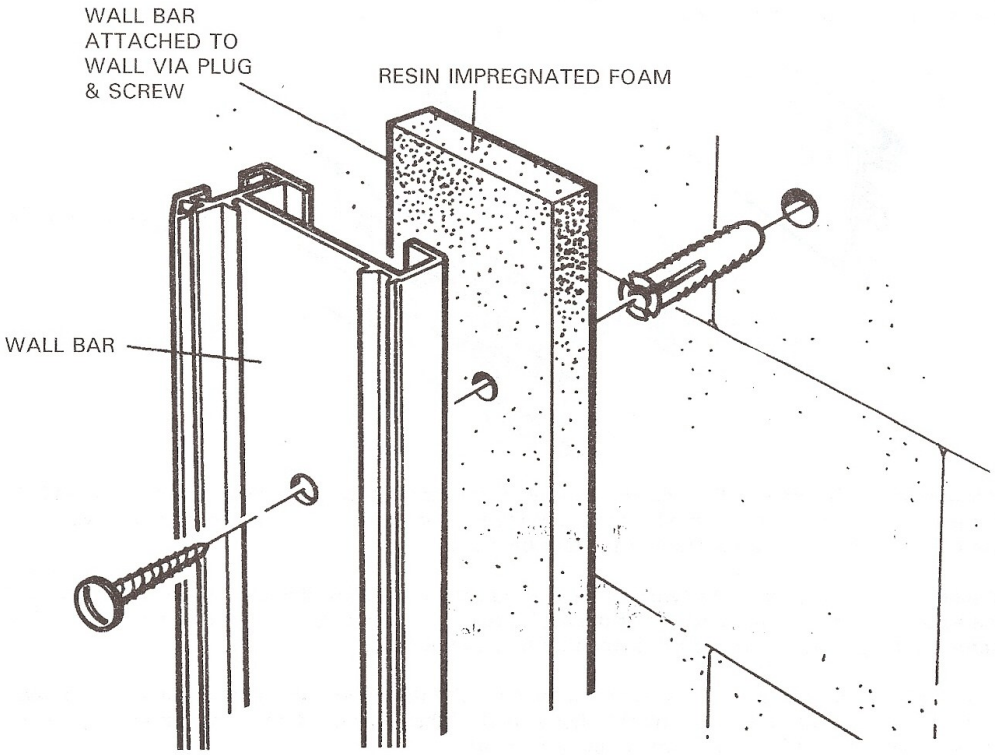

There are a number of small angle brackets in the pack of fittings; these are to be bolted onto the upright glazing bars at the point where the cills are attached to them. Before bolting them to the frame, first mark the brickwork where the holes are to be drilled. Drill the holes with a masonry bit and insert the plastic plug. Secure the small angle to the uprights and screw through the hole in the angle into the plug as illustrated.
The structure is now ready for the final sealant. There is a tube of silicon and a skeleton gun in the pack which you can now use to seal between the wall bars and ridge and the brick wall.

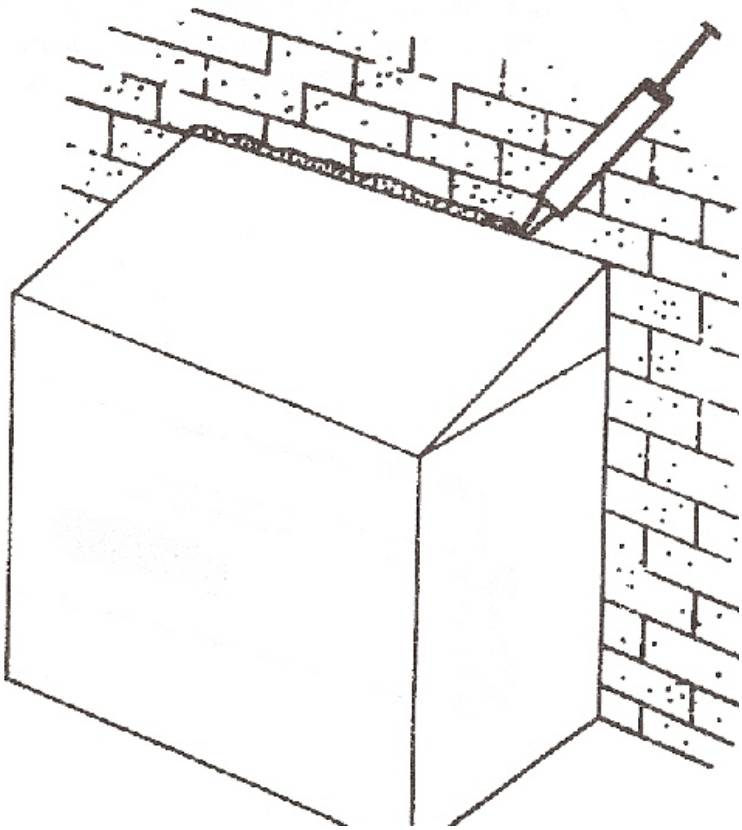

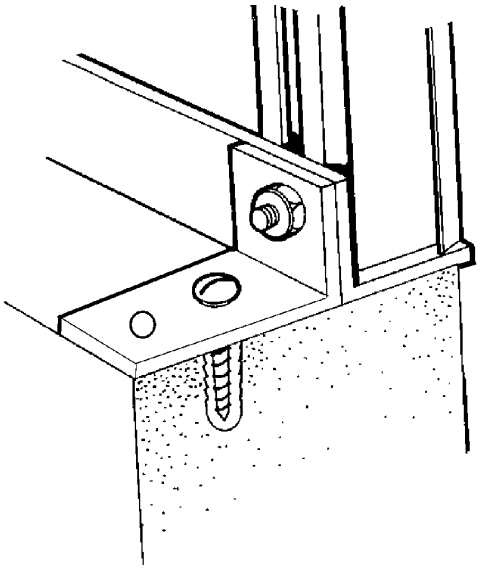

ROOF VENT ASSEMBLY

The roof vent pack has 5 pieces of aluminium: and from the main box of fittings you require
6' of glazing beading
4 nuts and bolts
2 casement stay pins
1 casement stay
6 M4 stainless steel nuts and bolts

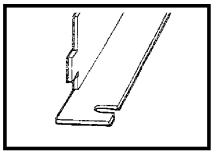

VENT SLAM BAR
(FITTED TO ROOF LATER IN ASSEMBLY)

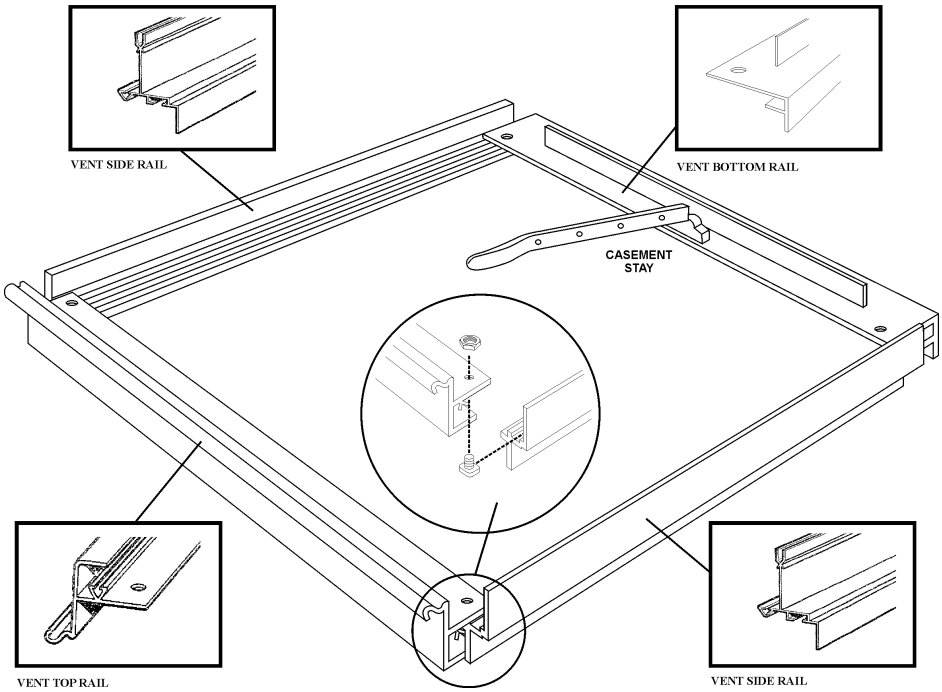

PROCEDURE:

1. Identify the slam bar and attach the 2 stay pins to the outer side of the angle using the M4 stainless steel nuts and bolts.

2. Lay the 4 edge pieces of the vent on a level surface as though you were on the inside of the vent (with the bolt slots of the side bars uppermost and the 'v' slots of the bottom rail upper most. The top rail is arranged in such a way that the squared off end is to the bottom and the hooked hinge uppermost).

3. Slide the glazing beading into the slots in the side and top rails and trim to suit.

4. Insert a bolt into each end of the side rail bolt slots, put these bolts through the holes in the top and bottom rails, add nuts and lightly tighten. Check that all joints are secure and that the vent is square, and then tighten up the nuts.

5. Fit the casement stay using the M4 stainless steel nuts and bolts, putting the bolts through the holes in the saddle of the stay and through the 2 elongated holes in the bottom rail. Hold the nuts in place and tighten the bolts with a screwdriver.

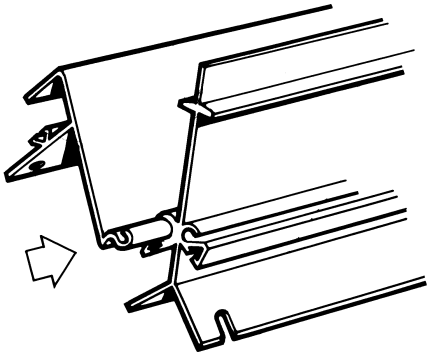

Do the same with the other vents.

The vents can be positioned onto the ridge after general assembly by sliding them along the ridge from the end and locating them to the desired position.

Do not fit the vent at this stage.

DOOR FRAME ASSEMBLY


DRAUGHT EXCLUDER

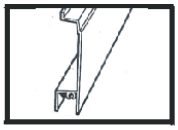
DOOR INFIL PANEL

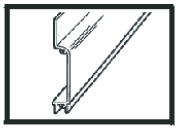
DOOR TOP/
BOTTOM PANEL

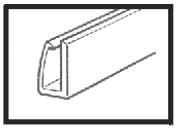
DOOR SKID

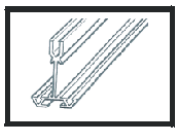
UNHANDED
DOOR POST

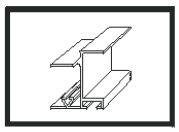
HANDED DOOR POST
LEFT HAND DOOR

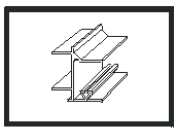
HANDED DOOR POST
RIGHT HAND DOOR

DOUBLE DOOR FRAME ASSEMBLY

Each Door consists of:

1 unhanded door post
1 handed door post (handed post for left door is different profile to the handed right hand door post)
3 infill panels (1 with pre fabricated lock hole right hand door only) for lock barrel
1 top and bottom door panels
3 panels of glass which must be fitted during door assembly
It is not possible to fit glass after the door is built

From the main bag of fittings you require;
2 door wheels
1 clip on nylon door skid (this might already be fitted to the bottom door panel)
2 lengths of black brush draught excluder with PVC carrier
Door lock (right hand door only), self tapping screws and spring washers
12' glazing beading
Door handles
3 PVC Glass strips

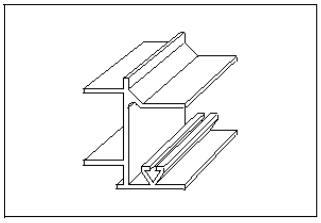

HANDED DOOR POST
RIGHT HAND DOOR

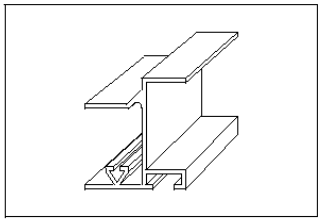

HANDED DOOR POST
LEFT HAND DOOR

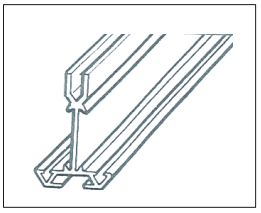

UNHANDED
DOOR POST

Left hand Door (viewed from outside)
Identify the correct door posts. The handed door post for the left hand door has a bolt channel, whereas the handed door post for the right hand door post does not. **(Key point).**

1. Place one unhanded post and the handed post for left hand door on a level surface roughly two feet apart with the bolt slots facing downwards. (Unhanded door post on the left, handed door post on the right). The top of each side post has two screw holes in it, the bottom has three. **(Key point).** Slide the glazing beading into the groove of each bar i.e. only one length of glazing beading per bar.

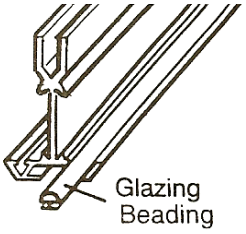

2. Place the top, bottom and 3 infill panels in position as shown by the position of the screw holes in the side pieces and the panels. The top panel has the greenhouse name on it. The bottom panel has the edge for the door skid to fit on. The lower infill panel locks on to the bottom panel. The infill panel for the left hand door **does not** have a pre fabricated hole for the lock barrel.

3. Fix the left hand door post to the door panels by screwing through the door side pieces into the holes provided in the edge of the panels with the self tapping screws. The screws will go in more easily and with out danger of trying to go crooked if you can put a small amount of grease on the screw before assembling the doors. Alternatively, you could insert the screws into the screw eyes of the door panels before assembling the door; this would have the effect of pre-self tapping the panels prior to assembly, making assembly easier.

4. **GLASS MUST BE FITTED TO EACH DOOR BEFORE THE 2ND DOOR POST IS FITTED—KEY POINT**

5. Before fitting the unhanded door post, offer the glass panels to the door (see glazing plan in booklet for glass size guide on door), slide them in from the side. Carefully attach the unhanded door post in the same way as before, ensuring the glass is sitting in the correct position (sitting on the beading channels of the door posts) before tightening the screws.

6. Make sure all angles are square and tighten all screws. Now insert 2 glazing clips to the glass on the unhanded door post. (If you have ordered bar capping, it will be wire clips).
The other side of the door is clipped using a pvc glass strip (or clip cap). Cut the strip to the correct length and push into the cavity between the glass and the handed door post. The cap when fitted acts as a wedge to prevent movement of the glass. Metal clips are not fitted to this bar.

7. Fix each door wheel into position by pushing the bolt provided through the centre of the wheel and then through the hole in the top door panel from underneath (i.e. from the inside of the door). Put the washer over the bolt and se cure with the nut provided, tightening until there is no movement on the bolt. The nuts are lock-nuts and are harder to put on than normal nuts in general assembly. The wheel will revolve freely because it has ball bearings in it. **The wheel has a collar protruding from the centre, this collar goes against the inside face of the top door panel. (See picture).**

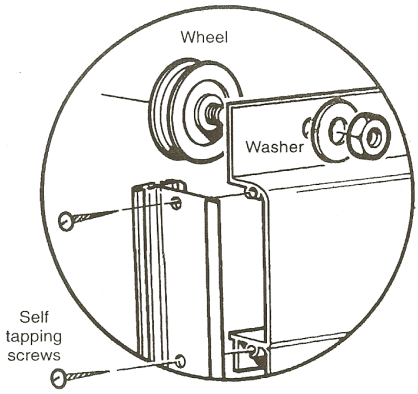

8. Slip the nylon door skids on each of the bottom panels. This may already have been done prior to delivery. After fitting the doors (see later in the booklet), you may need to lower the door skid so that it engages with the bottom door cill to allow smooth movement of the door. Lower the skid on each door and insert a self tapping screw at each end of the skid to rein force the position.

9. Build the right hand door using the remaining handed and unhanded door post. Viewed from the outside, the handed door post will be on the left of the door, while the unhanded door post will be on the right. At this point you must decide the height you would like your door lock. The hole to take the door lock is on the left hand side of the infill panel. You can decide to fit this panel to the 2nd or 3rd panel down. **Make sure you fit the glass before final fixing of the door.** See glazing plan towards the back of this booklet.

10. Thread the stainless steel backed brush extruder into the PVC carrier. This may already have been done prior to delivery.

11. Turn the doors over and insert the black brush draught excluder in the groove (bolt slot) in the unhanded door posts. Insert a nut and bolt at the bottom of each unhanded door post and tighten so that the brush will not slip down when the door is in its upright position. Cut off the surplus brush and carrier at the top of the bar.

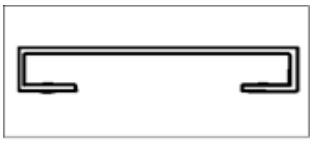

DOOR HANDLE

12. The handles are fitted to the infill panel on each door (choose between 1st or 2nd panel down). Position the handle centrally, and mark the hole position. Drill 7mm diameter holes (2 holes per door), then fit the handles, and secure with a nut and bolt.
13. Do not fit the door to the gable at this stage – wait until the structure is fully assembled prior to glazing.

INSTALLATION OF DOUBLE FRONT DOOR

1. Fit the door track to the main door track support before offering to the structure. **(Key point).** The door track has a continuous bolt channel in the flat section of the bar. Slide 3 bolts into the bolt channel and line up with the 3 holes in the door track support. Loosely add the nuts and slide the door track left or right so that it covers the area of the door in the open and closed position. Tighten the nuts. For a front position door the two slotted holes that connect the door track support to the two front glazing bars are facing **DOWNWARDS** like a letter 'n'. **(Key Point).**

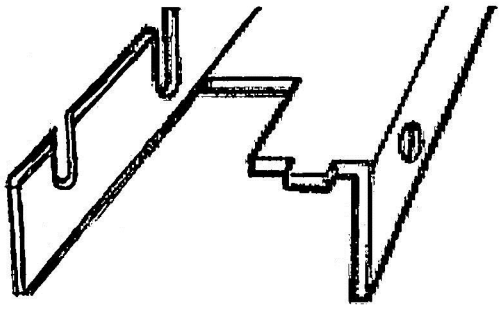

DOOR TRACK SUPPORT

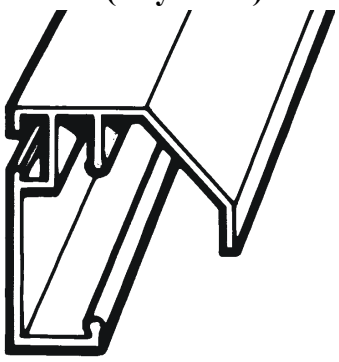

TOP DOOR TRACK

2. Having decided where the door is positioned, install the door track support at the door opening bay utilising the unoccupied bolts in the glazing bars. Fit the door track support below the gutter, as high as possible.

3. The door track is now in position and ready for the addition of the doors.

4. Before fitting the door you must cut away the horizontal bracing angle using a hacksaw and metal file, to afford access through the door opening. This may already be done prior to delivery.

5. Slide the left hand door from the left hand side and the right hand door from the right hand side, (front door) or for gable doors, both doors must slide from the eaves.

6. The installation of the double door is now complete.

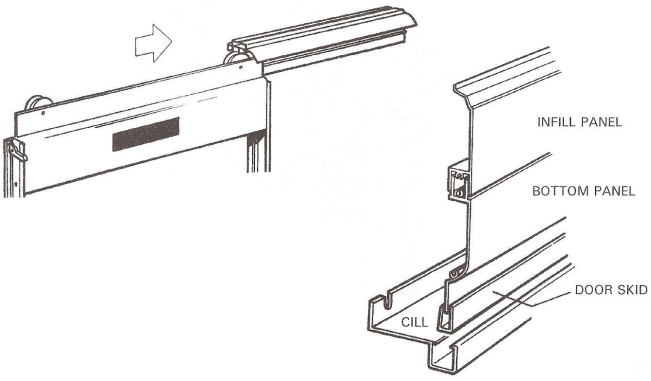

5 BLADE LOUVRE

Procedure

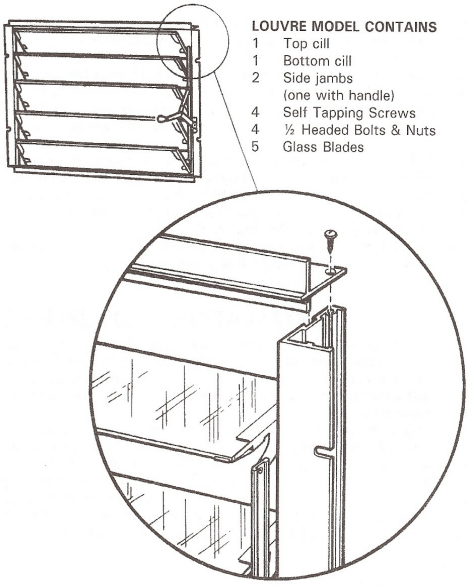

1. Place top cill into position on side jamb of louvre and secure with self tapping screws.
2. Do same on the other top corner.
3. Do same with bottom cill.
4. Please note that the handle is on the right hand side, the above diagrams are viewed from the middle.
5. To fit the louvre to the structure, utilise the extra bolts you inserted during side frame assembly. Insert a glass pane at the bottom, bolt the louvre to the framework and slide it down so that the bottom cill of the louvre frame is touching the pane of glass.

INSTALLATION OF 5 BLADE LOUVRE

The louvre can be installed to either the fixed gable end or front assembly (but must be between 2 glazing bars, not corner bars). This position might not be variable depending upon your door position.

1. The louvre must be fitted after the unit has been fully assembled and anchored to the wall and base, and prior to glazing.
2. The louvre is fitted to the glazing bars of the fixed gable end utilising the 4 unoccupied bolts previously inserted into the bolt slots of the glazing bars concerned during original assembly.
3. The louvre is fitted from the inside of the structure with the angle jambs fitting around the glazing bar. **N.B.** The handle is on the inside of the greenhouse and the right hand side as viewed from inside the structure.
4. To determine the height, install a pane of glass under the louvre (glass size dependant upon desired louvre height- see relevant glazing plan).
5. Inside the fitting you will have 4 louvre clamps/louvre.
6. Using the previously inserted bolts (or using 1/2 head bolts supplied) loosely fit the 4 brackets as shown to the greenhouse frame, and then tighten so as to clamp the louvre frame to the greenhouse.
7. Offer the louvre frame to the bolts; add the nuts and finger tip tighten.
8. Slide the completed framework to the top of the pane of glass so that the bottom cill of the louvre rests on the glass.
9. Tighten all nuts.
10. Louvre frame installation is now complete.

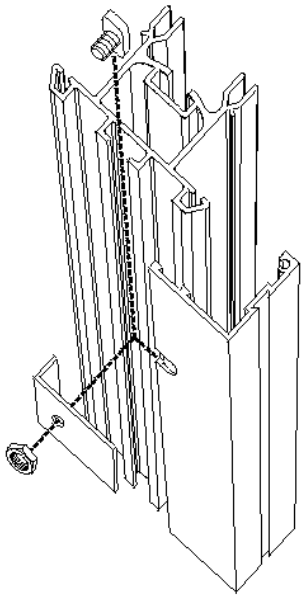

BRACKET FIXING TO LOUVRE FRAME

GLAZING THE LOUVRE

1. The louvre must be glazed after it has been installed to the structure.
2. Open the louvre using the handle.
3. Slide each individual blade of glass between the jambs into the aluminium holders.
4. The glass will come to rest in the holder at the bottom of the jambs.

Partition—You can now build your partition starting with the wall bar and cill. When these are fitted attach the glazing bars and door configuration as previously done in the door end assembly.

PARTITION

If you have purchased a partition it is at this point you construct the frame in situ. In the box you will find packs marked
Partition corner bars
Partition door end cill
Partition door end
Partition door tracks
Partition door panels
Partition door posts
You will also require a number of fittings from the box:
1 gusset plate
Glazing beading
Nuts and bolts

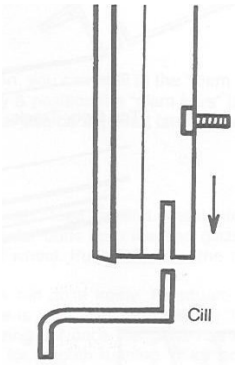

PROCEDURE

1. Starting with the corner bars, identify the roof and side, left and right hands as you did earlier.

2. Each corner bar has a saw cut approx. 20mm into the bar from each end, but apart from that they are identical. Insert the glazing beading as before – but this time into all 3 grooves of the corner bar. **(Key point).**

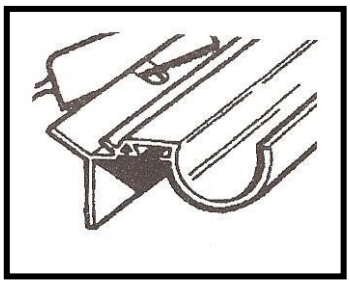

3. Having established where the partition is going you will need to make the holes in the gutter, ridge and cill into slots. Do this by carefully hack sawing down into the hole to form the slot. **(Key point).**

4. If the doors on your partition are to face the rear end, then the bolt channels on the roof and side corner bars <u>must</u> face the front door. (For partition doors facing front door, the bolt channels of the corner bar must face the rear end.

5. Take the side corner bar, insert 1 bolt into each end of the alternative bolt slots, then offer it up to the eave/gutter and cill so that the flange of the cill and the eave are inserted into the saw cut. **(Key point).** Loosen the bolts just inserted and lower into the slot on the gutter and bottom cill and finger tip tighten.

6. Repeat for the roof corner bars, but insert 6 bolts into the alternative bolt channel. 1 each end and 4 in the middle to attach to the top hat sections.

7. Next, offer the gusset plate to the corner bars at the point where they meet. Slide the bolts in the facing bolt slot towards the gusset plates and line up the holes in the gusset plate with the bolts in the facing bolt slot and in the flange of the corner bar. Insert 2 bolts through the gusset plate and flange (middle 2 holes), put a nut on – finger tip tight. Do not put the nuts on the upper and third bolts of the eave gusset plates at this stage. **(Key point).**

8. The cill can now be attached to the facing bolt slot of the partition corner bar (in the same way you did during the original door end assembly).

9. You can now attach the two vertical glazing bars and wall bar. Thread the glazing beading into the channels and trim to suit. Follow instructions earlier in the plan related to building a gable with doors.
For both double and partition-door ends you can now fit the upper door track.

FITTING THE DOOR LOCK

The door lock must be fitted after the doors are in position **(Key Point).** Undo the ring bolt from the door lock, and insert the barrel through the hole in the panel from the outside. Reattach the ring bolt to the barrel on the inside, and tighten.
Now attach the cam lever, washer and screw to the door lock from the inside position of the door.
The lock will turn through 90 degrees both ways, so you must ensure the cam (when fitted) is pointing skywards (unlock position) and horizontal (locked position).
Now using a cropped head bolt, attach the domed pin to the bolt channel of the handed door post on the left hand door (viewed from outside). Move the pin up or down in the channel so that the notch on the cam locates comfortably when horizontal. Tighten all components.

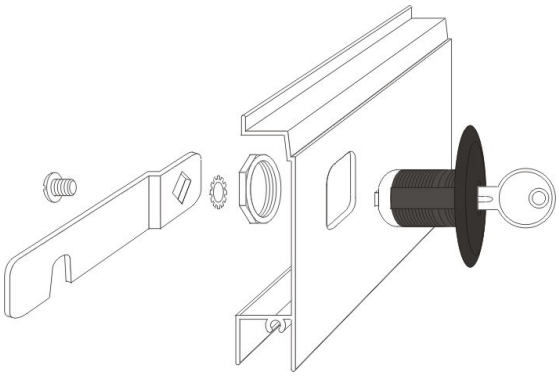

FINISHING OFF

To prevent the door from sliding past its opening, you must fix 2 angle brackets to the door end assembly. Insert a cropped head bolt into the bolt channel at the top of the left hand glazing bar (viewed from the inside) and fix and angle bracket as shown in the picture below.
The bracket must be fitted at the same height as the door panel so that, as the door moves left or right, the bracket prevents the door from moving too far along the top door track.
Repeat at the bottom of the door.
Repeat for the 2nd door.

To facilitate smooth running of the door, fit 1 flat bar at each end of the top door track.
The flat bar has 2 holes of different size.
Loosely fix the larger hole to the bolt channel at the back of the top door track using a short bolt and allow the flat bar to hand vertically down.
Move the flat bar along the top door track until the small hole in the flat bar meets the self tapping screw groove in the roof corner bar. For front doors, the flat bar screws into the vertical glazing bar/corner bar instead of roof corner bar.
Fix the small hole in the flat bar to the corner bar using a self tapping screw.

GLAZING THE STRUCTURE

Having anchored the structure to the wall and its base, observing the earlier comments about levels, square etc. you can commence glazing.
If you are out on any of the 4 key points i.e.

1. Plumb wall
2. Level base
3. Square base
4. Base set at 90º to wall

then you will have difficulty in glazing. So please be sure before starting this section of construction.

TOUGHENED GLASS

The toughened glass is in single sheets, apart from the shapes.
Where you have glass 'butt jointing together' you use the PVC muntin as indicated. If you have purchased the bar-capping, see separate capping instruction to be found with the capping bundle.
N.B There are a small number of stainless steel wire clips which you use immediately behind the door i.e. the section of glass that the door opens on to.
NB. If you have purchased PVC bar capping, the stainless steel band clips are replaced by wire clips. See separate instruction packed with bar capping bundle.

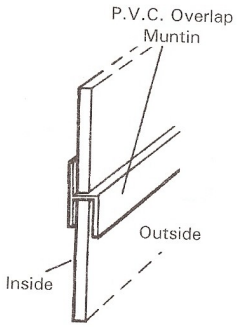

The glass to fit along the front (under the gutter) is required to be longer than the glass supplied. To overcome this, you will find a number of PVC spacer bars inside the packet of glass delivered (full sheet toughened glass only). This spacer must be fitted to the top of the front pane before the glass is installed to the front assembly.

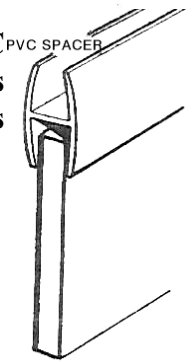

Starting with the roof glass (refer to glazing chart) slide the glass onto the roof until the bottom edge sits in the recess on the gutter bar. Insert stainless steel band/spring clip approx. 3" from the bottom of each side and then equidistance along the length. (12 clips per pane on the roof glass, 10 per pane on the side glass and 4 per small pane/shape).

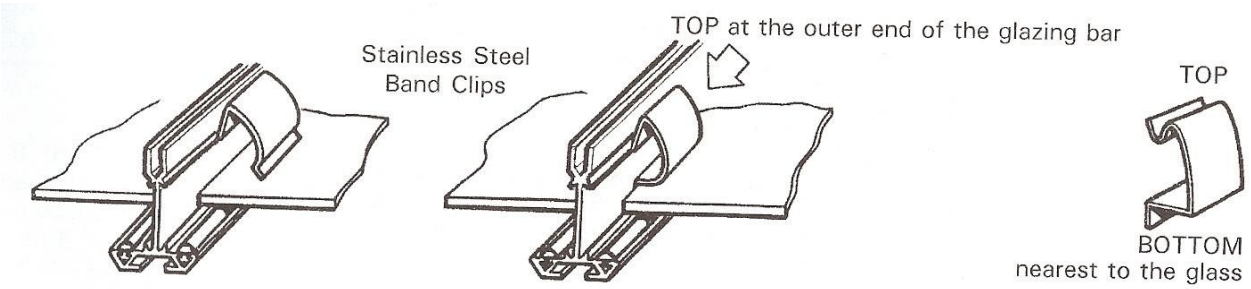

Wire clips
Wire clips are used to replace the stainless steel clips in the following situations.

Door:
Wire clips are to be used on the glass behind where the doors slide. Wire clips are only needed on one side of these sheets of glass. See the diagram below.

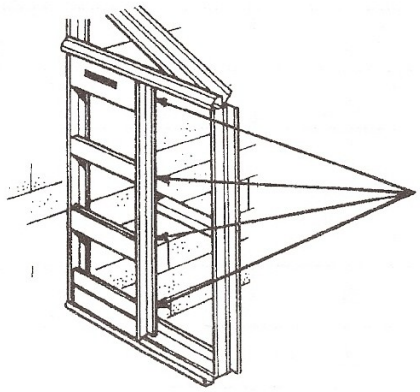

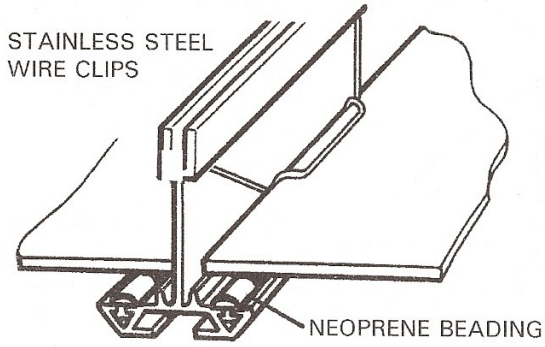

The same wire clip is also used everywhere on the greenhouse if bar capping is fitted.

Roof vent:
Wire clips must be used on the panes of glass either side of the vent. The wire clips are only necessary on the sides of the glass nearest to the vent. This is because the vent side rails overlap the roof glazing bars. See diagram below.

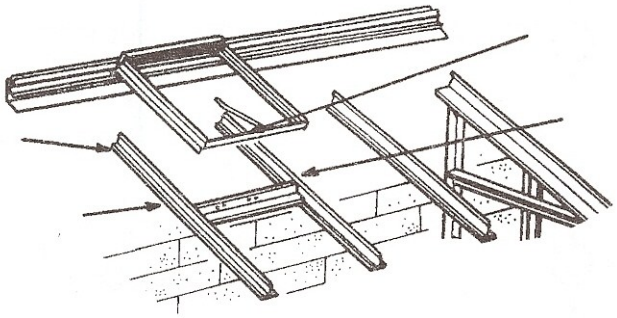

N.B. Stainless steel band clips are not required when additional optional glazing capping is used. However wire clips are still necessary in the position mentioned earlier (i.e. under the vent and behind the door). The above mentioned rules apply for both toughened glass and horticultural glass.

K800 TOUGHENED GLASS PLAN
WITH DOUBLE GABLE DOORS

DOOR END GABLE

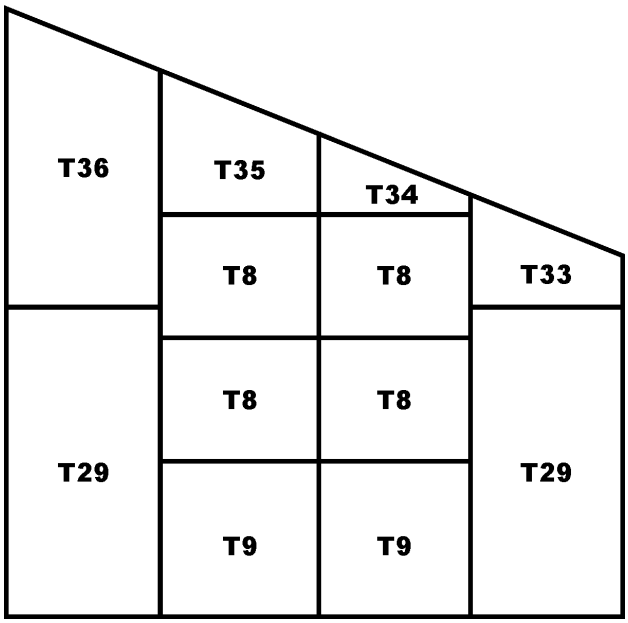

REAR END

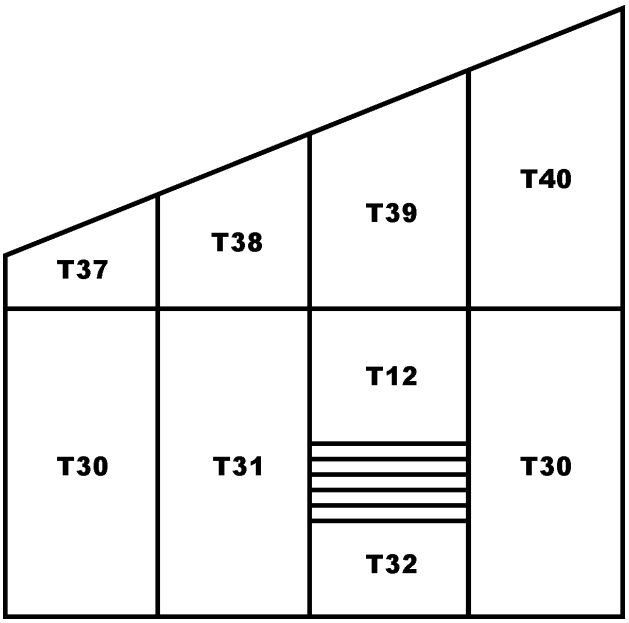

ROOF

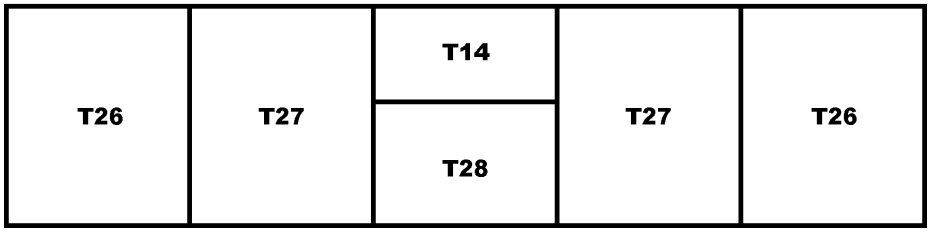

FRONT WITHOUT DOORS

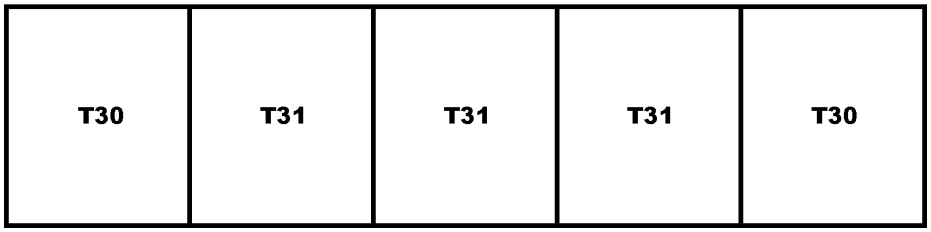

T8	610 X 457
T9	610 X 610
T12	585 X 1197
T14	640 X 610
T17	545 X 100
T26	598 X 2602
T27	585 X 2602
T28	585 X 2003
T29	610 X 1930
T30	598 X 1930
T31	585 X 1930
T32	585 X 286

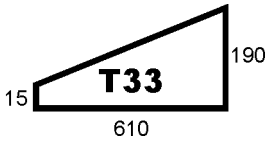

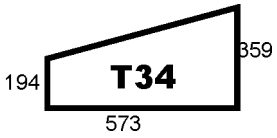

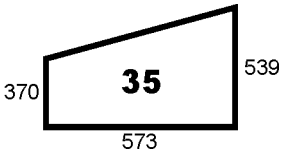

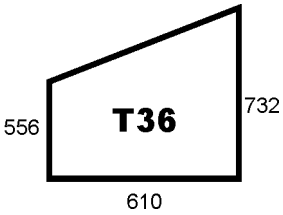

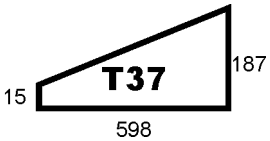

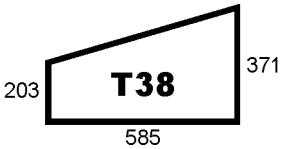

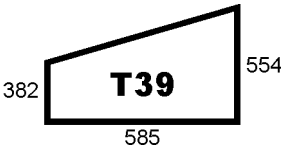

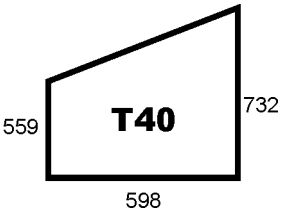

K800 TOUGHENED GLASS PLAN
WITH DOUBLE DOORS ON FRONT

FRONT WITH DOORS POSITIONED 1 BAY IN FROM END

<table>
<tr><td rowspan="3">T29</td><td>T8</td><td>T8</td><td rowspan="3">T29</td></tr>
<tr><td>T8</td><td>T8</td></tr>
<tr><td>T9</td><td>T9</td></tr>
</table>

FRONT WITH DOUBLE DOORS

<table>
<tr><td rowspan="3">T30</td><td rowspan="3">T30</td><td>T8</td><td>T8</td><td rowspan="3">T29</td></tr>
<tr><td>T8</td><td>T8</td></tr>
<tr><td>T9</td><td>T9</td></tr>
</table>

FRONT WITH DOUBLE DOORS (OVER 12' LONG)

<table>
<tr><td rowspan="3">T30</td><td rowspan="3">T31</td><td rowspan="3">T31</td><td rowspan="3">T30</td><td>T8</td><td>T8</td><td rowspan="3">T30</td><td rowspan="3">T31</td><td rowspan="3">T31</td><td rowspan="3">T30</td></tr>
<tr><td>T8</td><td>T8</td></tr>
<tr><td>T9</td><td>T9</td></tr>
</table>

T8	610 X 457
T9	610 X 610
T29	610 X 1930
T30	598 X 1930
T31	585 X 1930

The sizes and quantities of glass will vary according to greenhouse size, door position and accessories added.

A glazing plan for your greenhouse specification will be attached to your delivery note.

FINISHING OFF

Now you have successfully completed the full installation of your lean-to greenhouse, there may be just a couple of things that require attention.

1. Ensure that you have neatly inserted silicone along the ridge and down the wall bars. Also at the point where;

a) The ridge, roof corner bar and wall bar meet, there may be a gap at this junction which can be filled in with silicone from the inside and tidied up with a knife from the outside.

b) At the part where the corner bars and gutters meet and once again a gap can occur that may require filling. Unlike the ridge joint, this is best done by inserting the silicone from the outside.

2. To avoid seepage of water between the cill of the structure and the brick base, it is best to put a fillet of cement to cover any gaps that may be there. When the cement has set, to finish the job off properly, give the fillet a coat of specialised paint to act as a further water barrier.

3. Ensure that all nuts and bolts are tight and that glazing clips are pushed securely into place.

4. Check that the door runs correctly and is properly secured. The catch must be in the downward position when the door is moving and then rotated 1/8 turn upwards to lock the door in place.

5. Maintenance with an alloy greenhouse is minimal but ensure that the door top and bottom tracks are free from debris which will inhibit its movement. The louvre has a number of moving parts which may require lubrication once in every 6 months with lubricating fluid of some kind.

6. Replacing broken glass requires care and attention:

a) Always wear protective gloves and eye protectors.

b) Remove the broken pieces from the frame; you may need a screwdriver or a knife to remove some of the smaller bits.

c) Do not attempt to remove a piece of glass still held in with clips, use a pair of pliers to remove the clip.

FITTING THE RAMP

The final aluminium piece of the greenhouse is the door end ramp cill. The ramp is attached to the door end cill by engaging the nub of the door end cill to the 'C' groove of the ramp. The ramp is now rotated to horizontal. Drill a hole at each end approx. 20mm in from the end of the ramp and into the floor. Plug and screw.

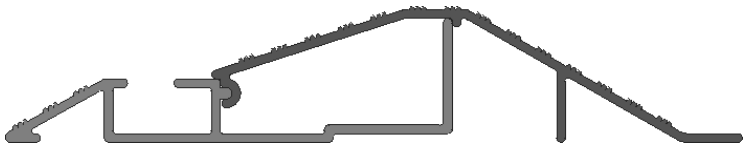

If you are fitting onto soft ground, you must ensure that a solid material is underneath the ramp to avoid damage when you step on the ramp to enter the greenhouse. You can lay a row of bricks sunk to ground level, a concrete flag, a piece of aluminium base pressed into the ground to ground level or something similar. You can then screw the ramp into the support material for a secure fixing.